CITROEN

FRONT WHEEL DRIVE

"Twelve" & "Fifteen" Models

REPAIR MANUAL

ILLUSTRATIONS

1938 1950

CITROEN CARS, LIMITED,
TRADING ESTATE,
SLOUGH, ENGLAND.

REPRINTED OCTOBER 1956

INDEX OF ILLUSTRATIONS IN REPAIR MANUAL

INDEX OF ILLUSTRATIONS IN REPAIR MANUAL

INDEX OF ILLUSTRATIONS IN REPAIR MANUAL

INDEX OF ILLUSTRATIONS IN REPAIR MANUAL

ENGINE

LIFTING ENGINE

SLING IN POSITION.

DIMENSIONS CONFORM TO STANDARDS CNM 601 OR CNM 602 FOR LIFTING CHAINS, RINGS AND EYES ACCORDING TO GENERAL PRACTICE.

MAXIMUM LOAD:- 250 KG (4·75 cwts)

ANNEALED MILD STEEL.

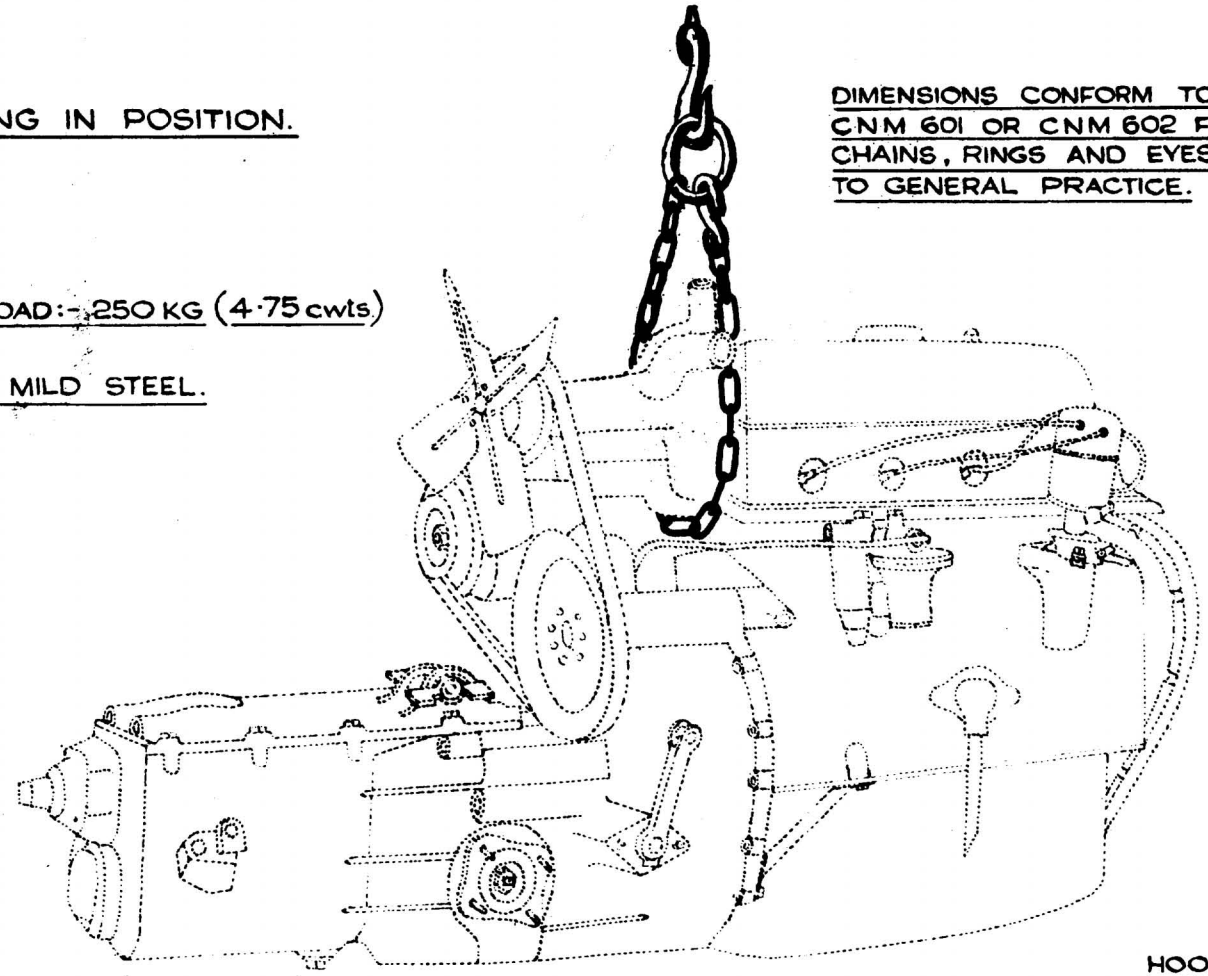

RING, 80 INSIDE DIA. MATERIAL 14 DIA.

HOOK, LOAD : 150 KG (2·85 cwts)

CHAIN MR. 3320-20

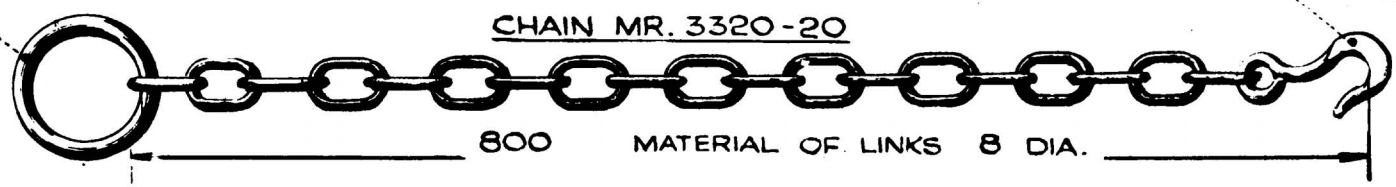

ENGINE

VARIOUS TOOLS

Fig.2. – PLUG SPANNER
1601-T

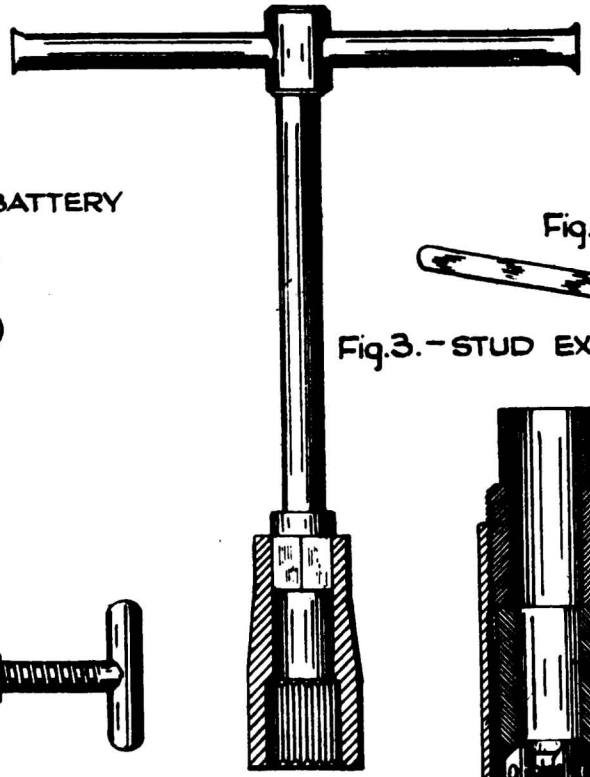

Fig.1. – EXTRACTOR FOR BATTERY TERMINAL
2200-T

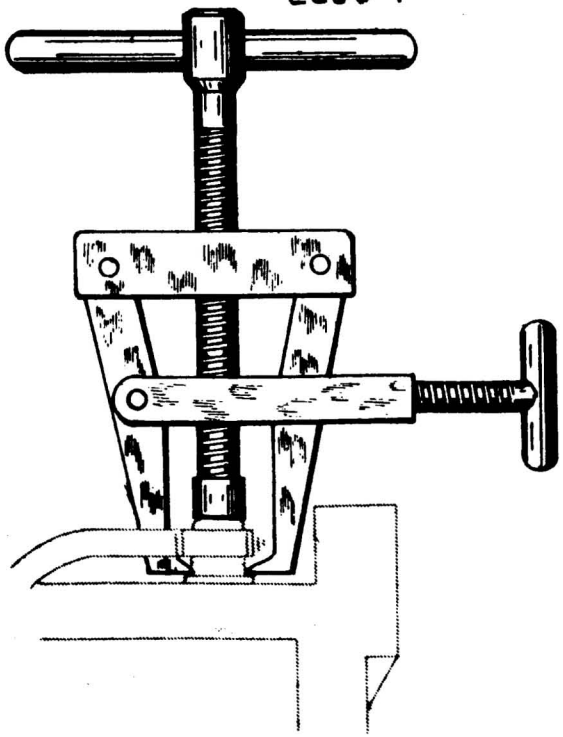

Fig.3. – STUD EXTRACTOR
2410-T

Fig.4. – APPLICATION OF COMPRESSOR

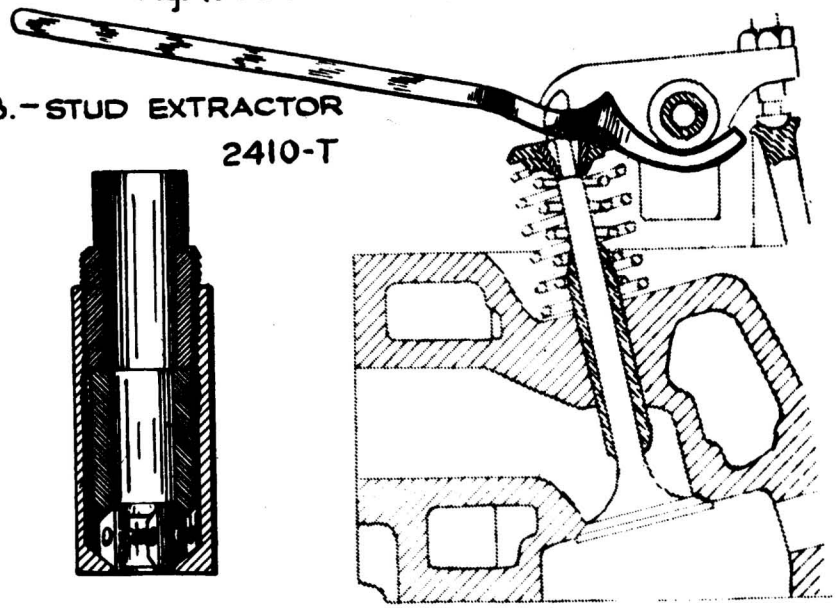

Fig.5. – VALVE SPRING COMPRESSOR
1511-T

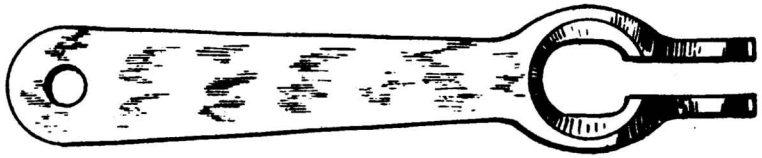

— ENGINE —

— CLUTCH CONTROL —

SETTING AND ADJUSTING INNER AND OUTER CLUTCH CABLES.

ADJUSTMENT OF CLUTCH PEDAL HEIGHT.

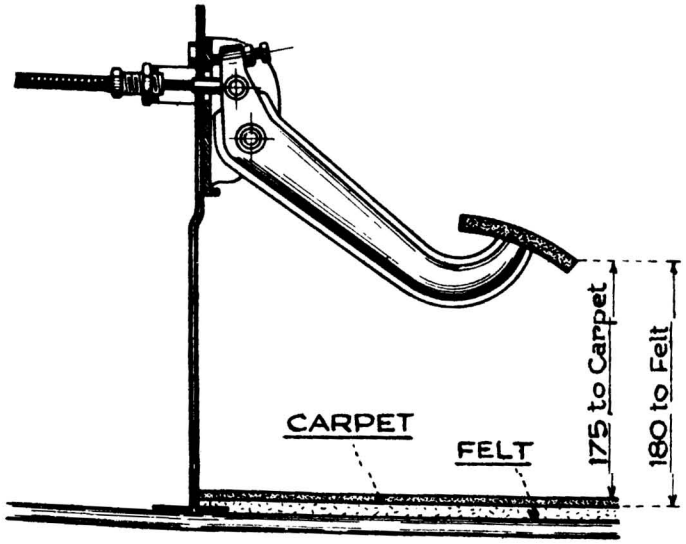

VIEW SHOWING CLUTCH CABLE IN POSITION.

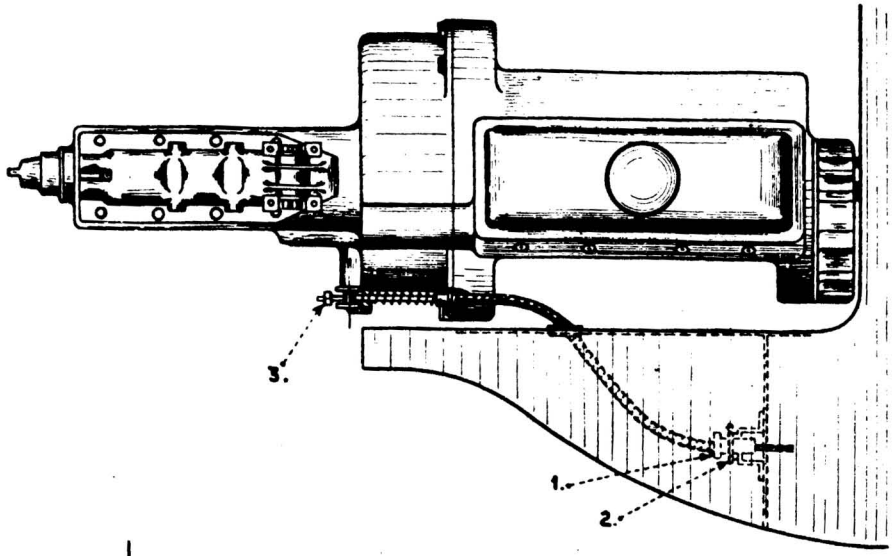

ADJUSTMENT OF OUTER CABLE

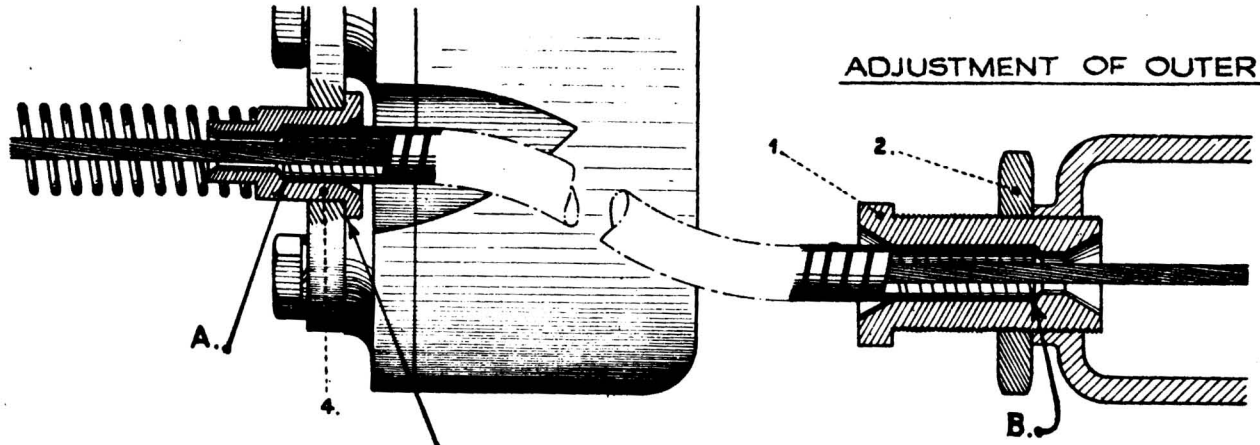

When declutching, outer cable must remain seated on cable. guide 4.

— ENGINE —

— TIMING DISTRIBUTOR —

HOW TO USE LOCATING PIN.

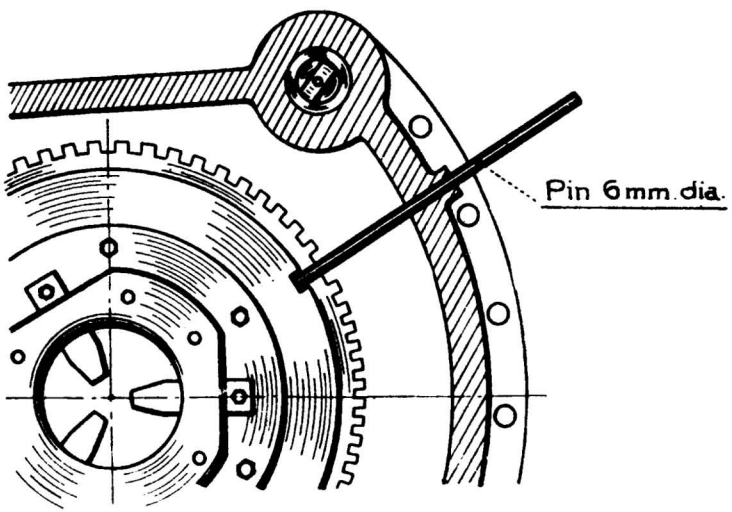

TIMING INSTRUMENT IN POSITION.

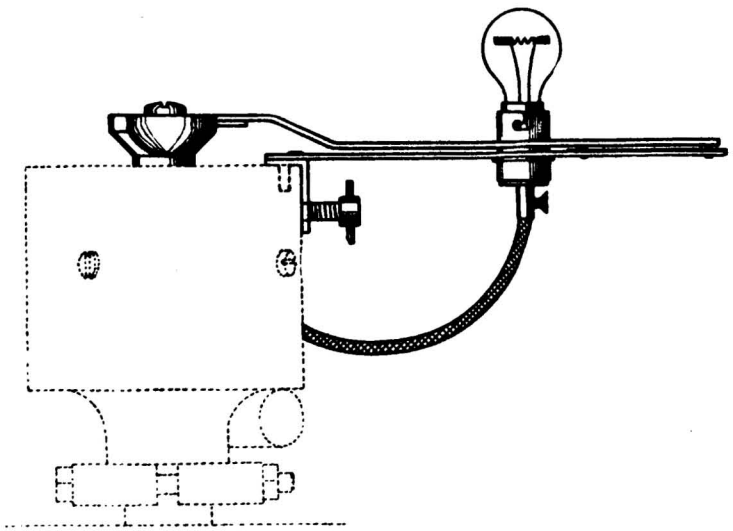

TIMING INSTRUMENT.
(1691T)

— FIRST READING —

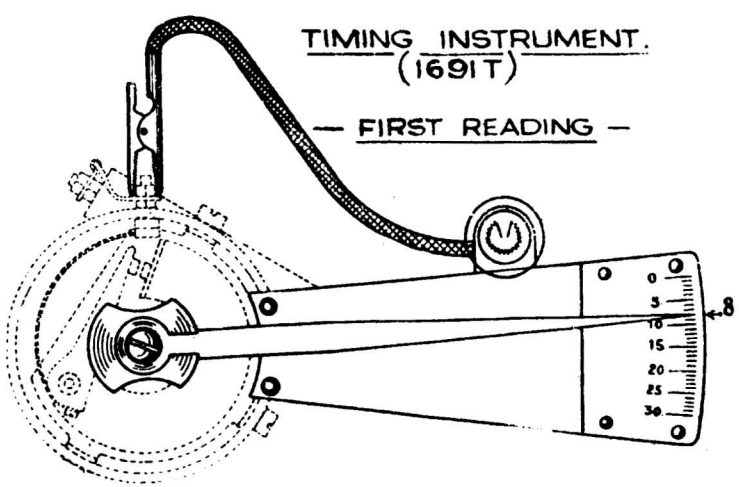

— SECOND READING —

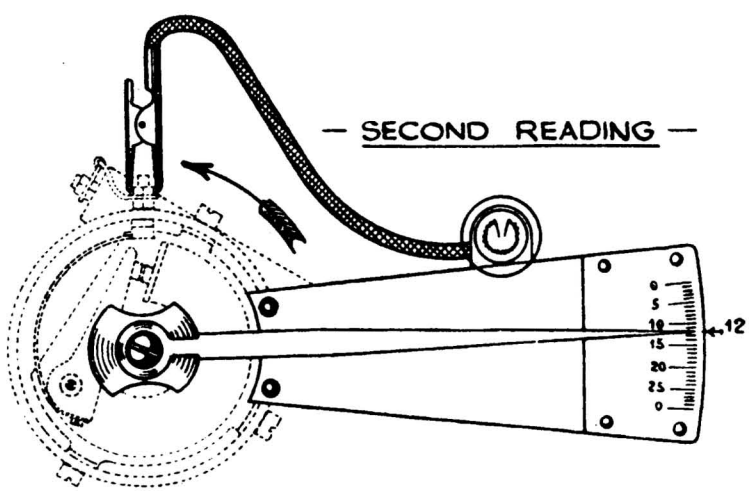

FIRST ADJUSTMENT : ENGINE IS SET AT 8° ON FLYWHEEL. 6mm. PIN IS ENGAGED IN FLYWHEEL SLOT AND LAMP IS ALIGHT.
CHECK NEEDLE POSITION.

SECOND ADJUSTMENT : TURN DISTRIBUTOR BODY ANTI-CLOCKWISE TO INCREASE ADVANCE BY 4°. NEEDLE SHOWS 4° MORE THAN PREVIOUS READING.

— ENGINE —

— CYLINDER HEAD —

Fig.1.- SEQUENCE FOR TIGHTENING CYLINDER HEAD NUTS.

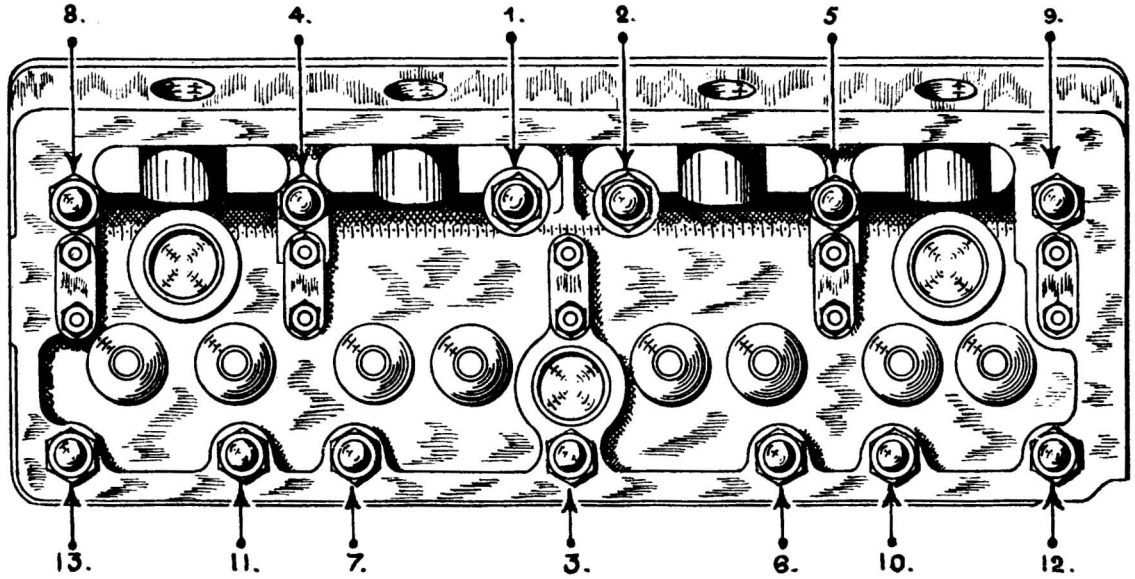

		IN METER - KILOS	IN FOOT - POUNDS
TIGHTNESS OF CYLINDER HEAD NUTS	1ST. TIGHTENING	3	21 · 7
	2ND. TIGHTENING	5	36 · 17
	TIGHTENING WHEN HOT	5	36 · 17

IT IS RECOMMENDED TO TIGHTEN CYLINDER HEAD NUTS IN THE ORDER STATED : THE DEGREE OF TIGHTNESS INDICATED MUST BE STRICTLY ADHERED TO AND OBTAINED BY USING TORSION SPANNER.

THIS SPANNER IS GRADUATED IN METER-KILOS AND USED WITH 12·7mm. SOCKET (2465 T)

WHEN EFFORT HAS REACHED CORRECT POINT ON GRADUATION AND ARTICULATION "A" FOLDS, STOP TIGHTENING. ARTICULATION "A" MUST NEVER CONTACT BODY OF SPANNER IN "B".

Fig. 2. - TORSION SPANNER. (2470T)

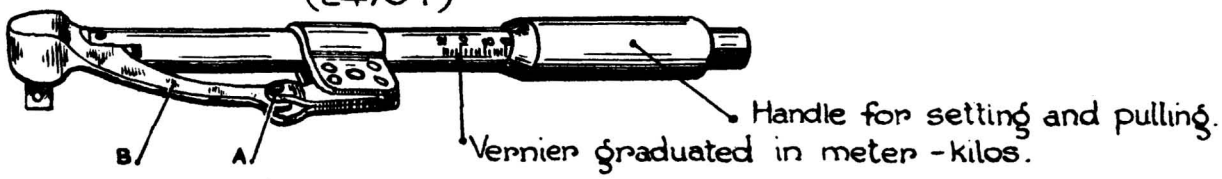

— CLUTCH —

— ADJUSTMENT OF GEAR LOCKING DEVICE, LIGHT —

LONGITUDINAL SECTION ON CENTRE LINE, SHOWING TAPERED END OF GEAR LOCKING ROD.

— Fig. 1. —

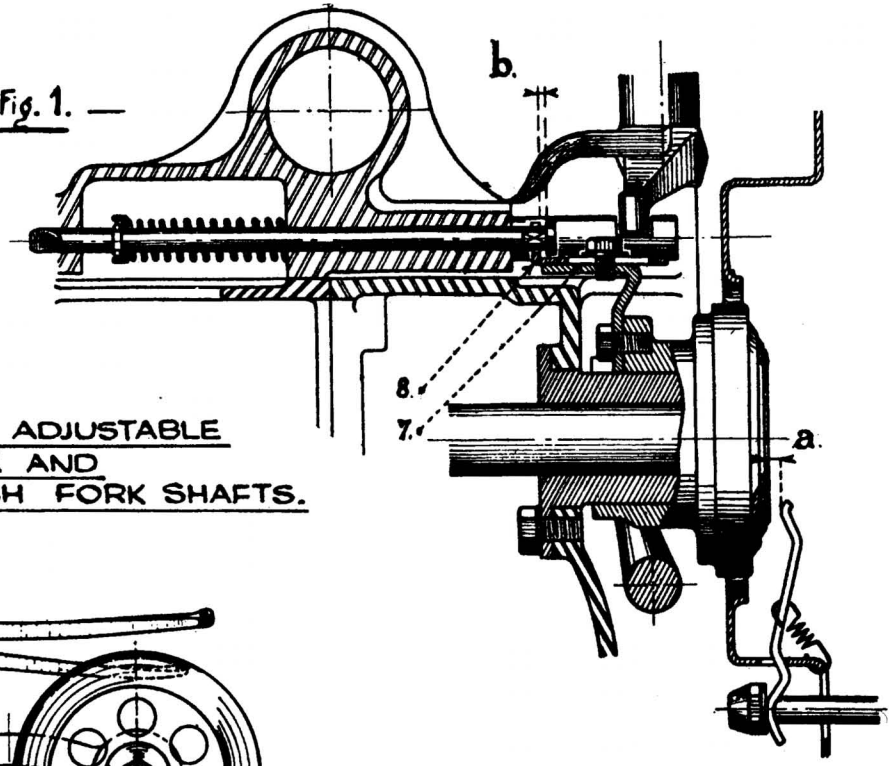

FRONT VIEW SHOWING ADJUSTABLE STOP FOR CLUTCH FORK AND SECTIONAL VIEW THROUGH FORK SHAFTS.

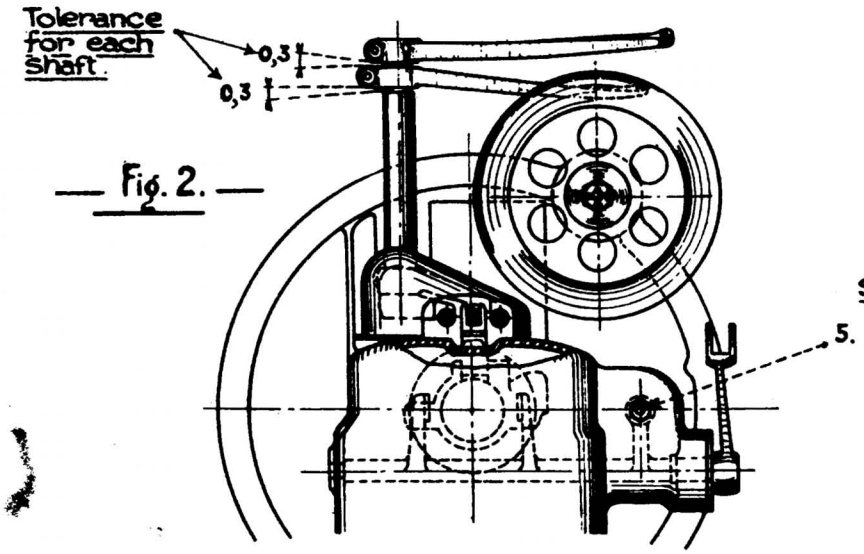

— Fig. 2. —

SIDE VIEW SHOWING FORK STOP ADJUSTMENT.

— Fig. 3. —

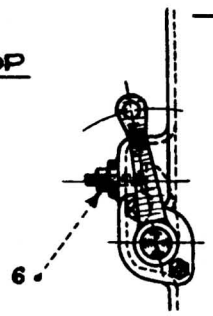

— ENGINE —

— ASSEMBLY, LONGITUDINAL SECTION —

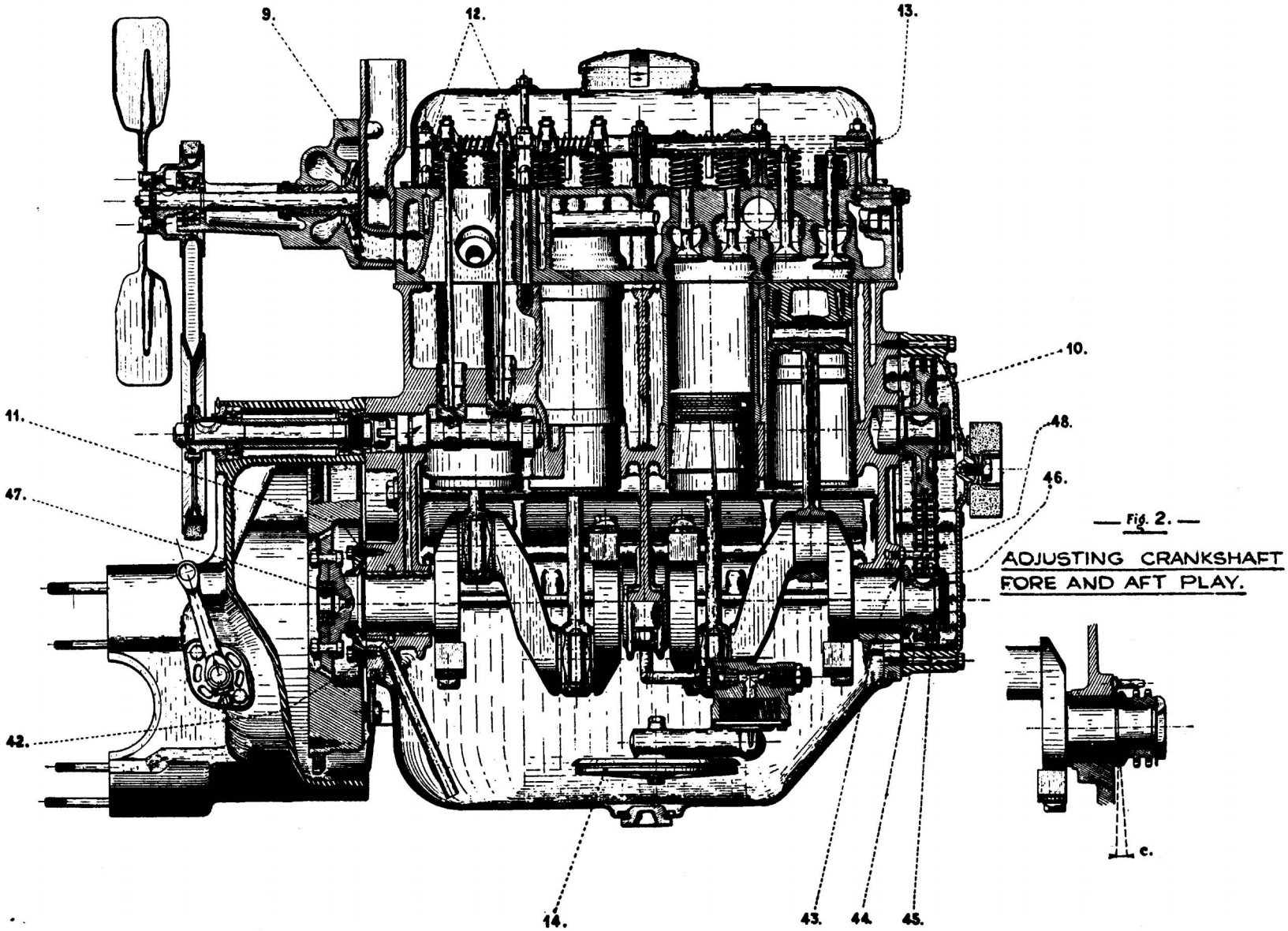

— Fig. 2. —

ADJUSTING CRANKSHAFT FORE AND AFT PLAY.

— ENGINE —

— ASSEMBLY, CROSS SECTION —

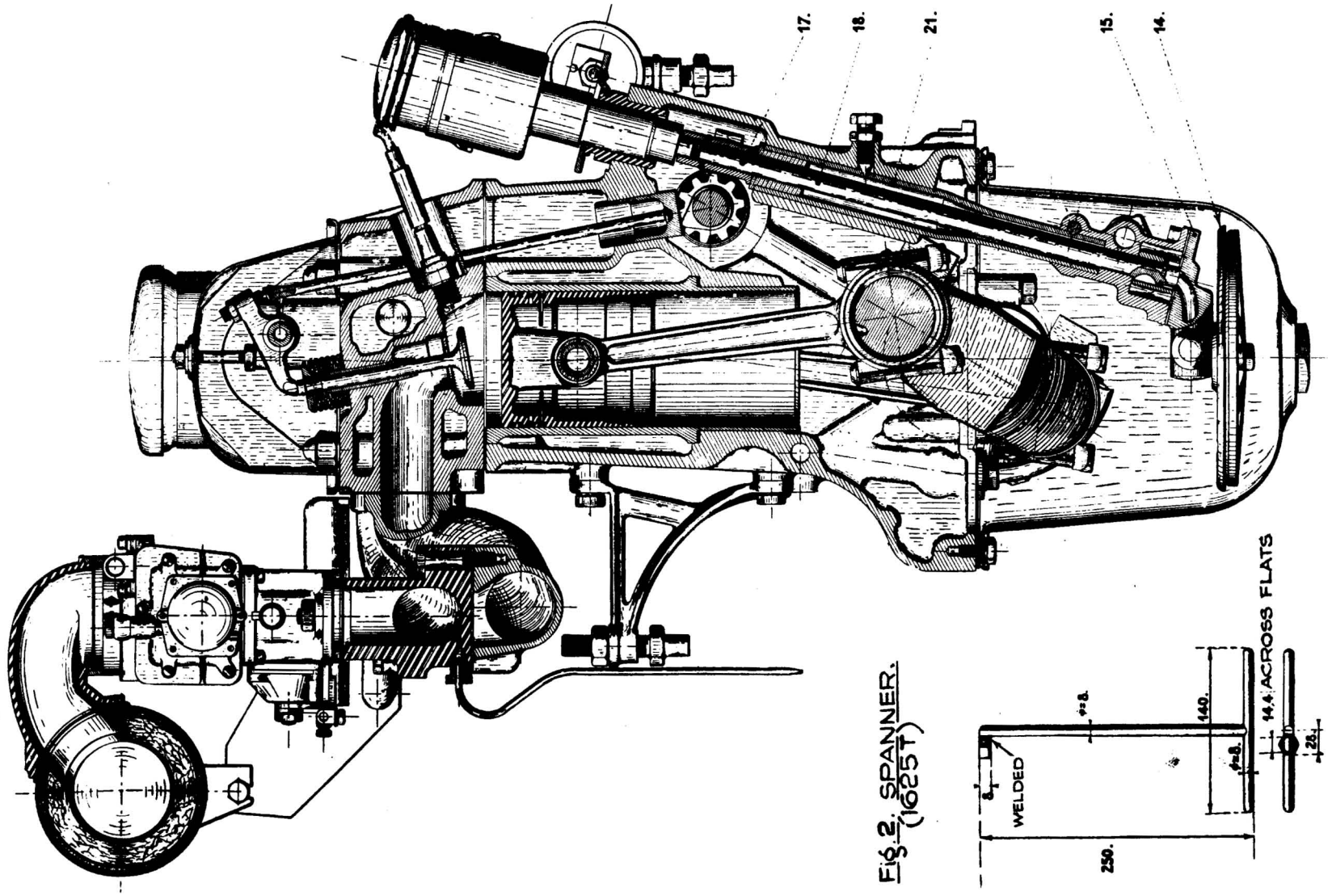

FIG. 2. SPANNER. (1625T)

— REPLACING VALVE SEAT OR GUIDE —

REPLACING SEAT

EXTRACTING SEAT USING BLOW PIPE.

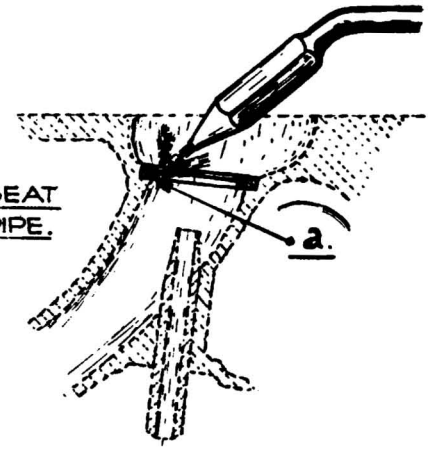

Prise up at 'a' with screwdriver.

MANDREL MR.3098-B FOR FITTING SEAT.

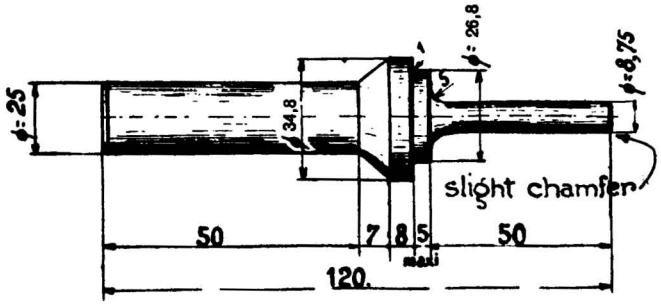

UNDERCUTTING SEAT FACE

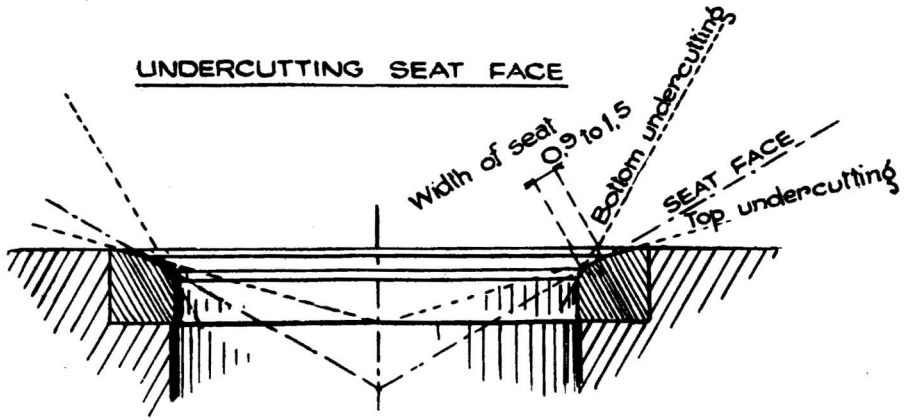

— REPLACING GUIDE —

MANDREL MR.1620-1 TO REMOVE GUIDE.

STOP GAUGE MR.1620-2 FOR FITTING GUIDE.

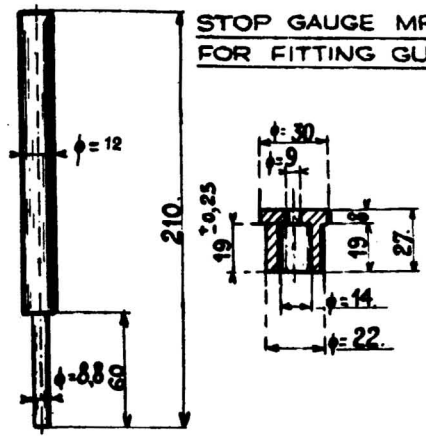

— FITTING GUIDE —

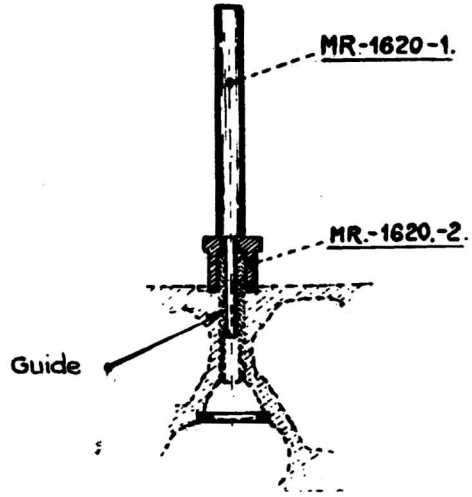

— ENGINE —

— OIL PUMP ASSEMBLY —

VERTICAL SECTION.

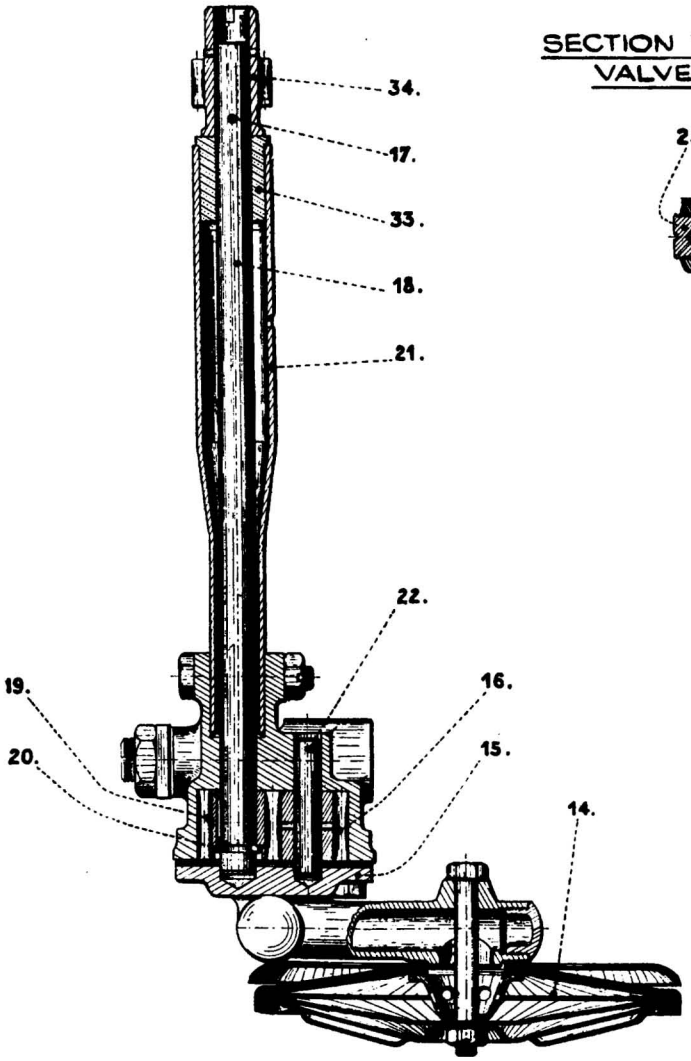

SECTION THROUGH RELEASE VALVE AND SPRING.

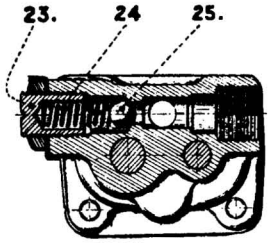

ORDER OF ASSEMBLY OF GASKETS AND MOUNTING OF PUMP BASE.

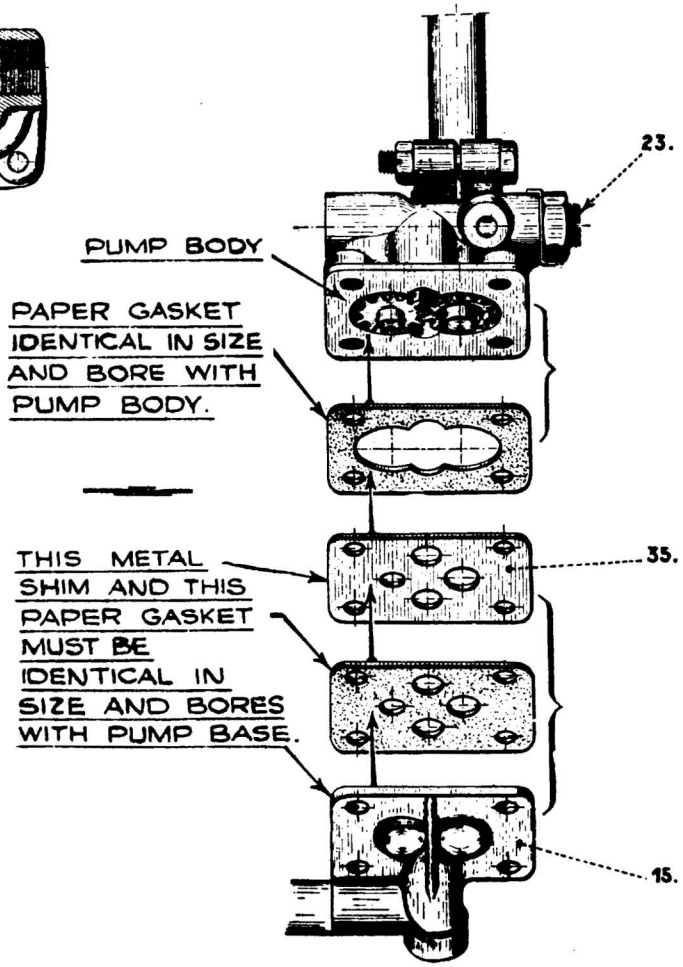

ENGINE

FAN & WATER PUMP ASSEMBLY

LONGITUDINAL SECTION ON CENTRE LINE

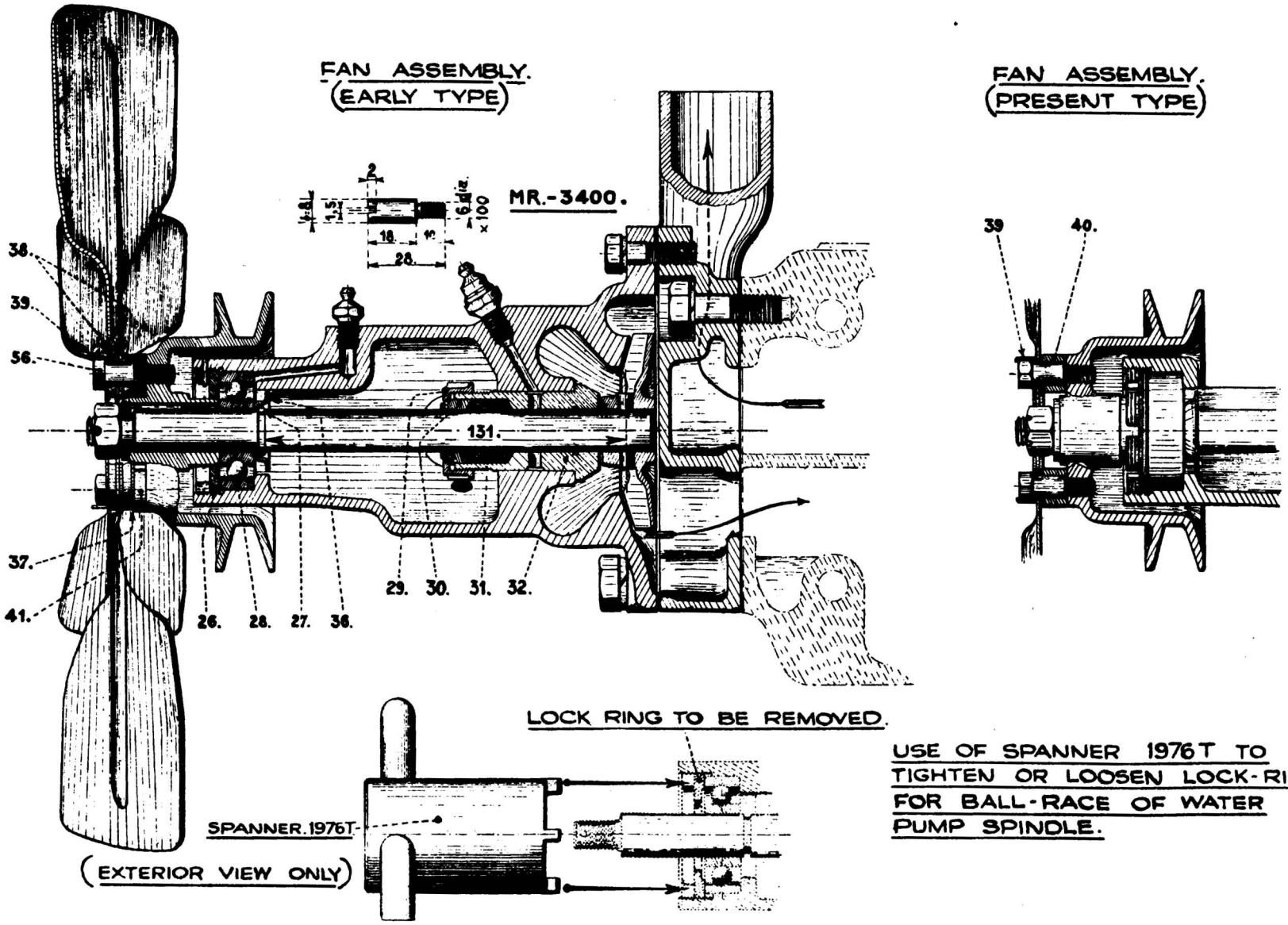

USE OF SPANNER 1976T TO TIGHTEN OR LOOSEN LOCK-RING FOR BALL-RACE OF WATER PUMP SPINDLE.

— SPRING TESTING —

1. CHECKING LENGTH OF SPRING:
   PLACE SPRING TO BE CHECKED "1" BETWEEN FACES OF GUIDE "2": DRAW SLIDE "3" INTO CONTACT: ARROW "4" COMES OPPOSITE FIGURE ON SCALE OF LENGTHS "5" INDICATING FREE LENGTH OF SPRING "1".
2. CHECKING LENGTH OF LOAD:
   (a) PLACE STANDARD SPRING "6" (OR "12" ACCORDING TO REQUIREMENTS) IN TWO HOLES "7" AND DRAWSLIDE INTO CONTACT BY MEANS OF HAND-WHEEL "9".
   (b) BRING SPRING TO BE TESTED "1" UNDER LOAD INDICATED IN BOOK BY MEANS OF HAND-WHEEL "9". READ THE LENGTH SHOWN BY ARROW "4" ON LENGTH SCALE "5".
   (c) READ ON SCALE { 10 (in kilogrammes) OPPOSITE ARROW 11 (IF USING STANDARD SPRING 6) / 14 (in kilogrammes) OPPOSITE ARROW 13 (IF USING STANDARD SPRING 12) } CORRESPONDING LOADING.

Fig. 1. - SPRING TESTING APPARATUS.
(2420 T)

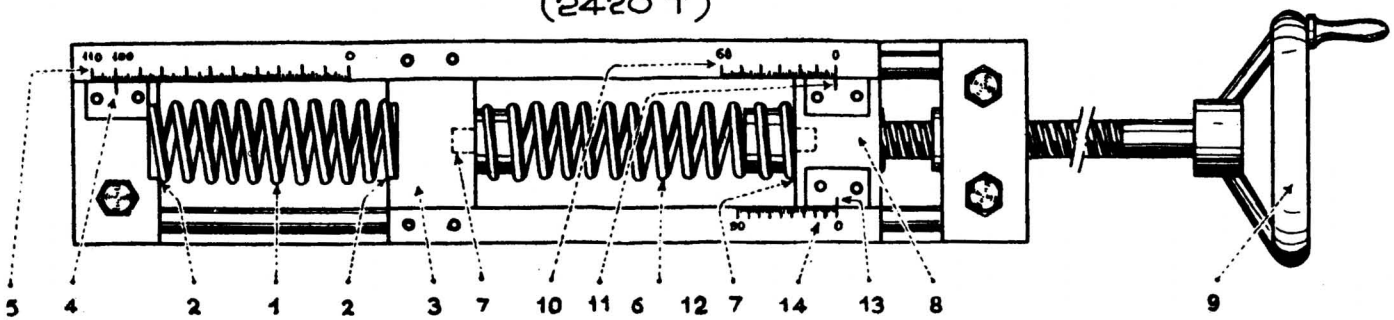

Fig. 2. - STANDARD SPRINGS.

SPRING, COMPRESSION.
1mm. PER 1 KG. LOAD
(2421 T)
This spring is painted yellow.

SPRING, COMPRESSION.
1mm PER 2 KG LOAD.
(2422 T)
This spring is painted red.

ENGINE

FITTING SPARKING PLUG HOUSINGS

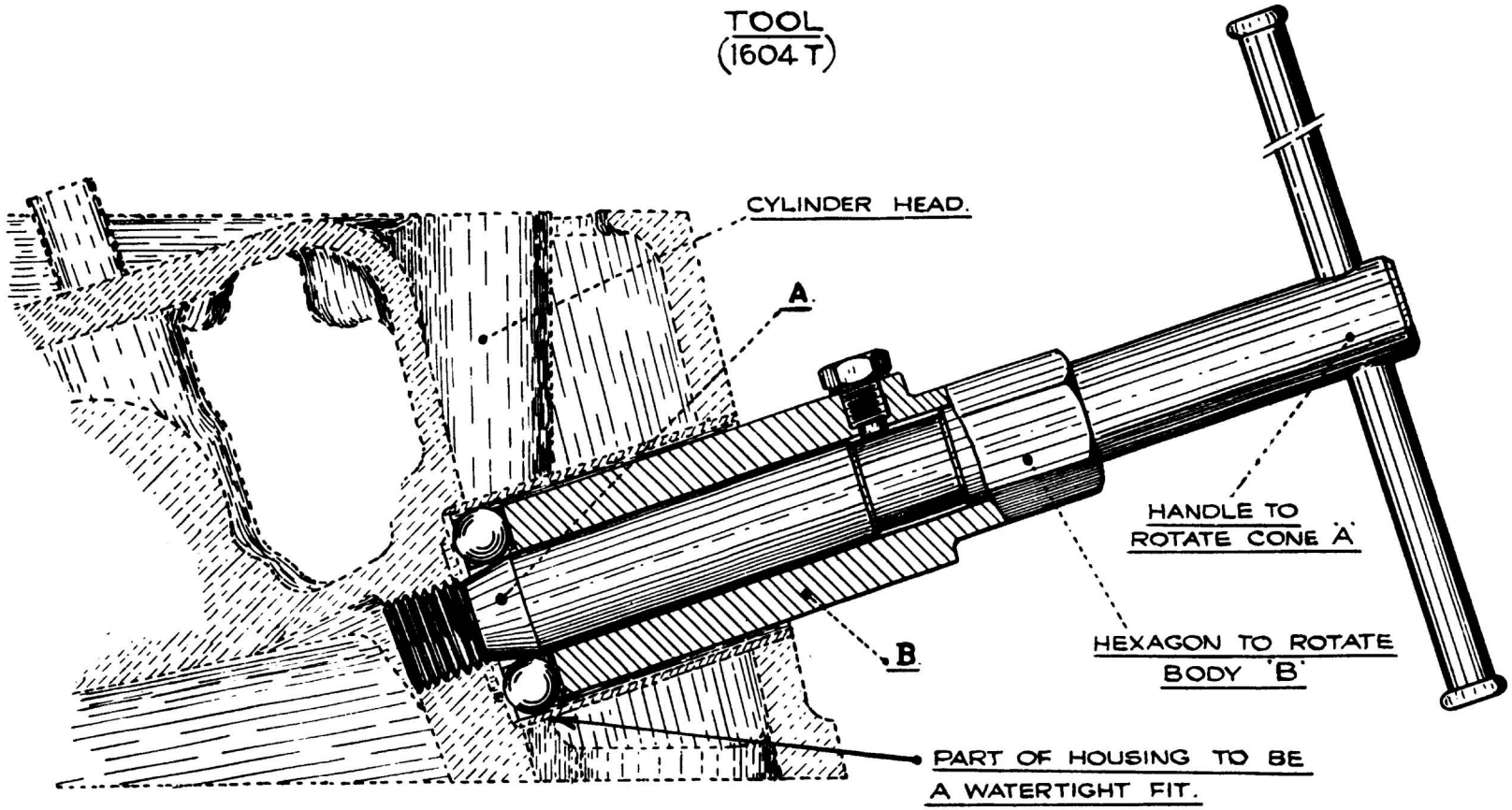

SCREW CONE 'A' INTO SPARKING PLUG THREADING TO EXERCISE PRESSURE ON BALLS.
GIVE ONE TURN TO BODY 'B' BY MEANS OF SPANNER 19 mm. ACROSS FLATS.
SCREW DOWN CONE 'A' AGAIN AND GIVE ONE MORE TURN TO BODY 'B'.
THIS SHOULD BE SUFFICIENT TO ENSURE A WATER-TIGHT FIT.

— ENGINE —

— ADJUSTMENT OF OIL PUMP —

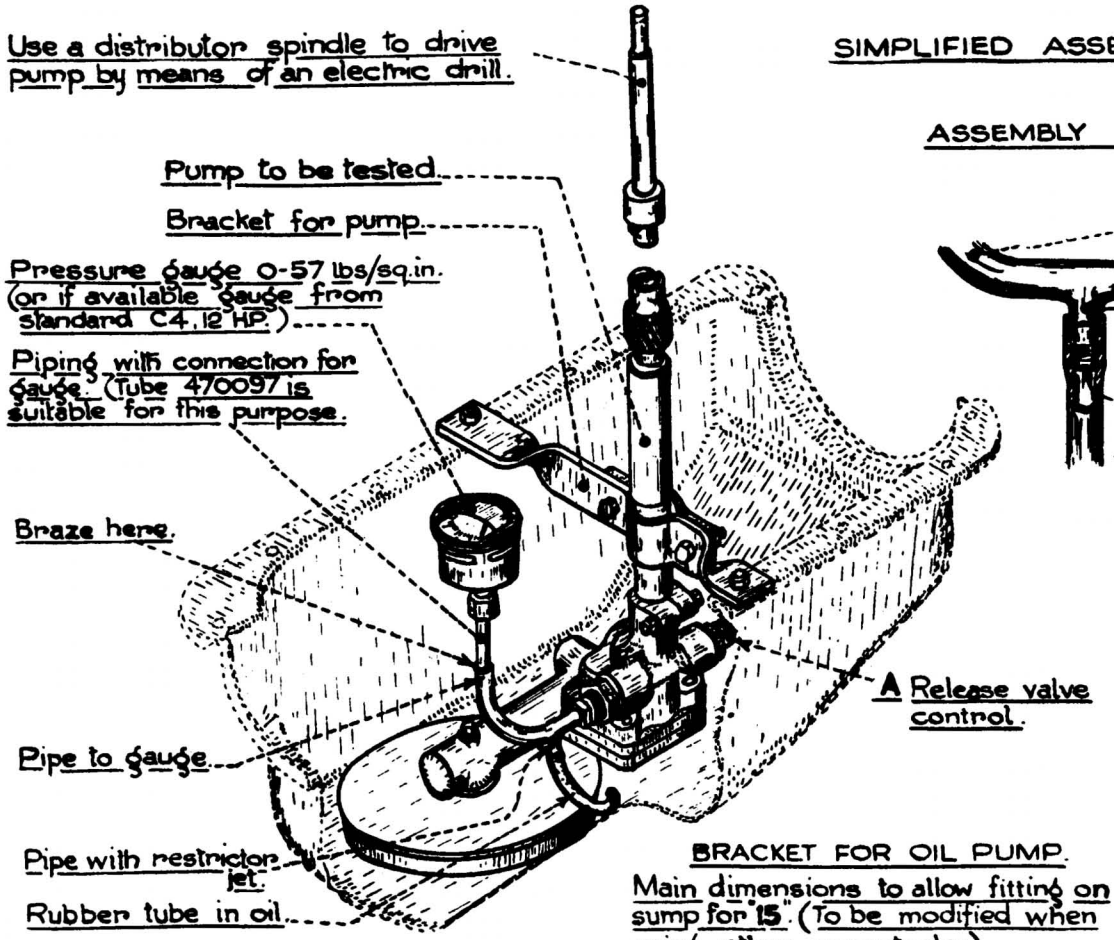

SIMPLIFIED ASSEMBLY MR. 1811.

ASSEMBLY OF JET.

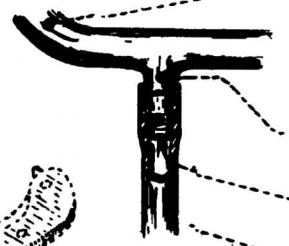

BRACKET FOR OIL PUMP.

Main dimensions to allow fitting on sump for "15". (To be modified when using other receptacles)

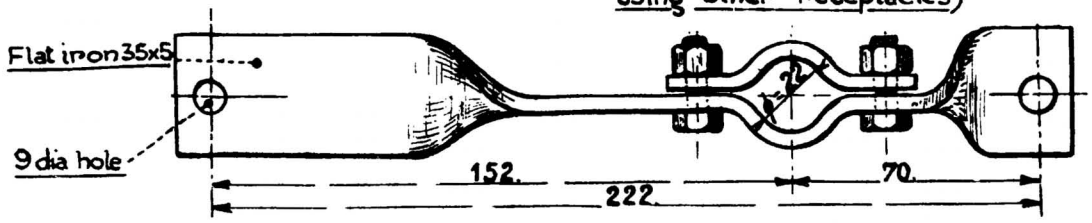

The pump to be tested fitted on a sump will be driven by an electric drill 1000-1500 R.P.M. (Normal speed usually marked on maker's name-plate)

USE WINTER GRADE OIL "MOBILOIL ARCTIC"

NOTE: IF POSSIBLE HEAT OIL TO 150°F. The pressure indicated by gauge should remain between 28-31.5 lbs/sq.in.

IF THIS IS IMPOSSIBLE BRING OIL TO 68°F

The pressure indicated should remain between 32-35 lbs/sq.in.

TO BRING PRESSURE TO CORRECT FIGURE.

Screw up release valve control to increase pressure.

Unscrew release valve control to reduce pressure.

— ENGINE —

— WATER PUMP BUSH —

Fig.1. - REAMING BUSH.

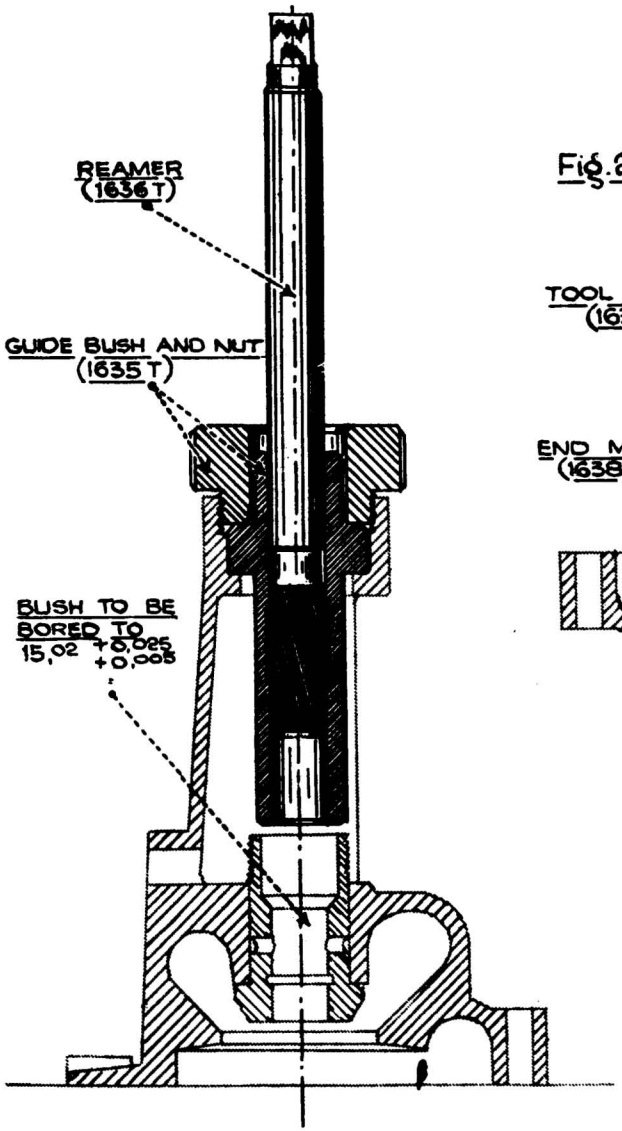

Fig.2. - MILLING IMPELLOR SEATING FACE.

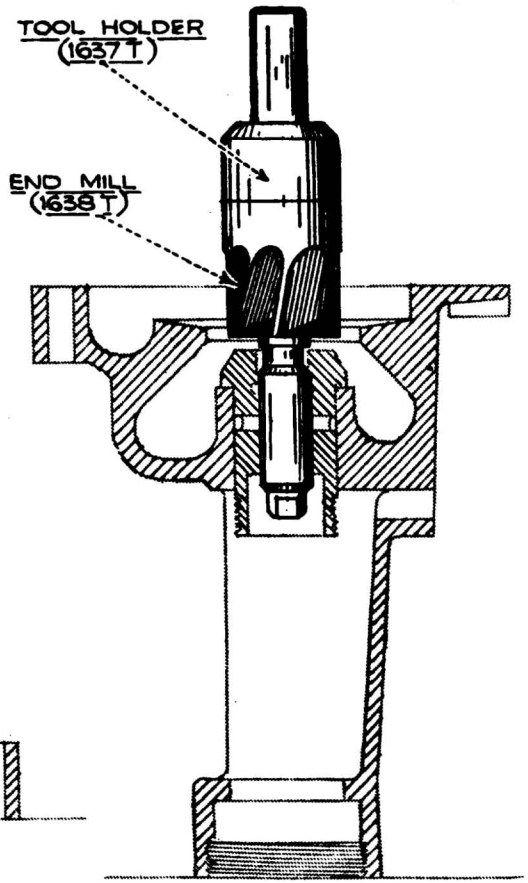

Fig.3. - CHECKING MILLING OF IMPELLOR SEATING FACE.

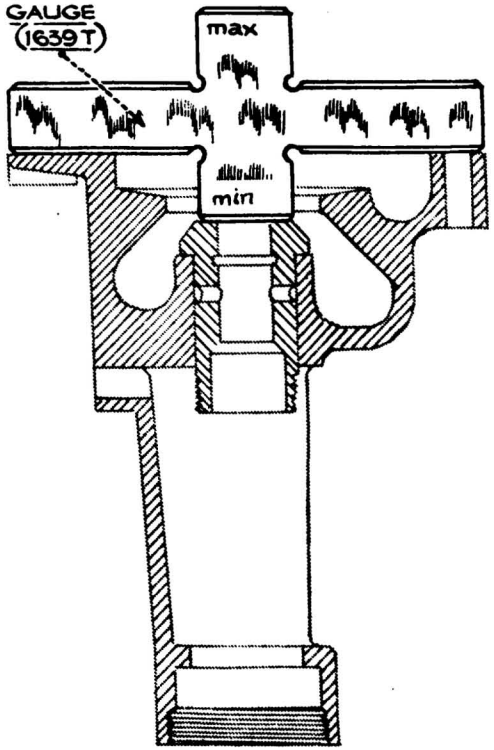

—ENGINE—

—FITTING BEARINGS BY MEANS OF SHIMS—

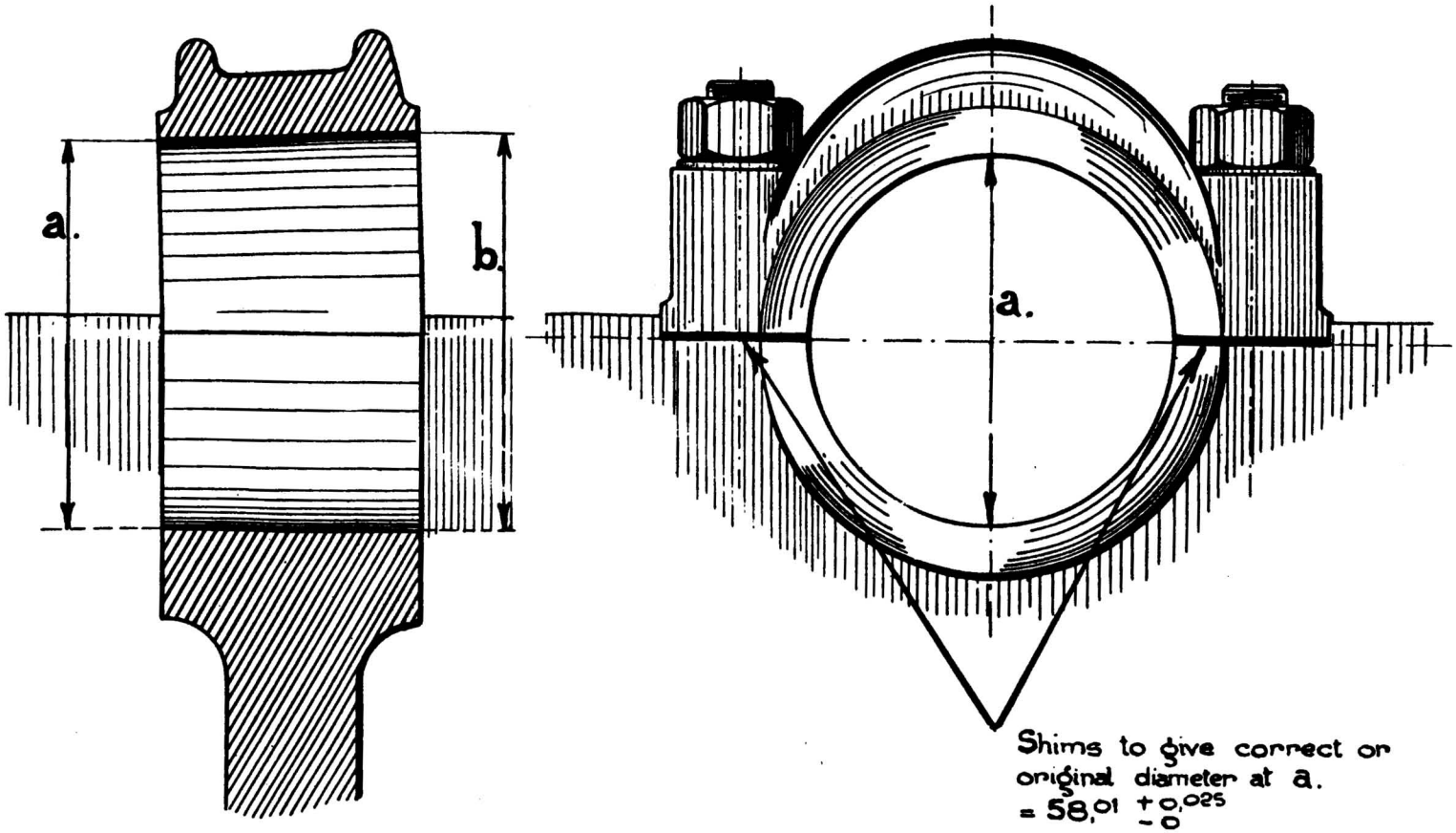

—ENGINE—

— BORING & ALIGNMENT OF OIL BAFFLES —

USE OF APPARATUS

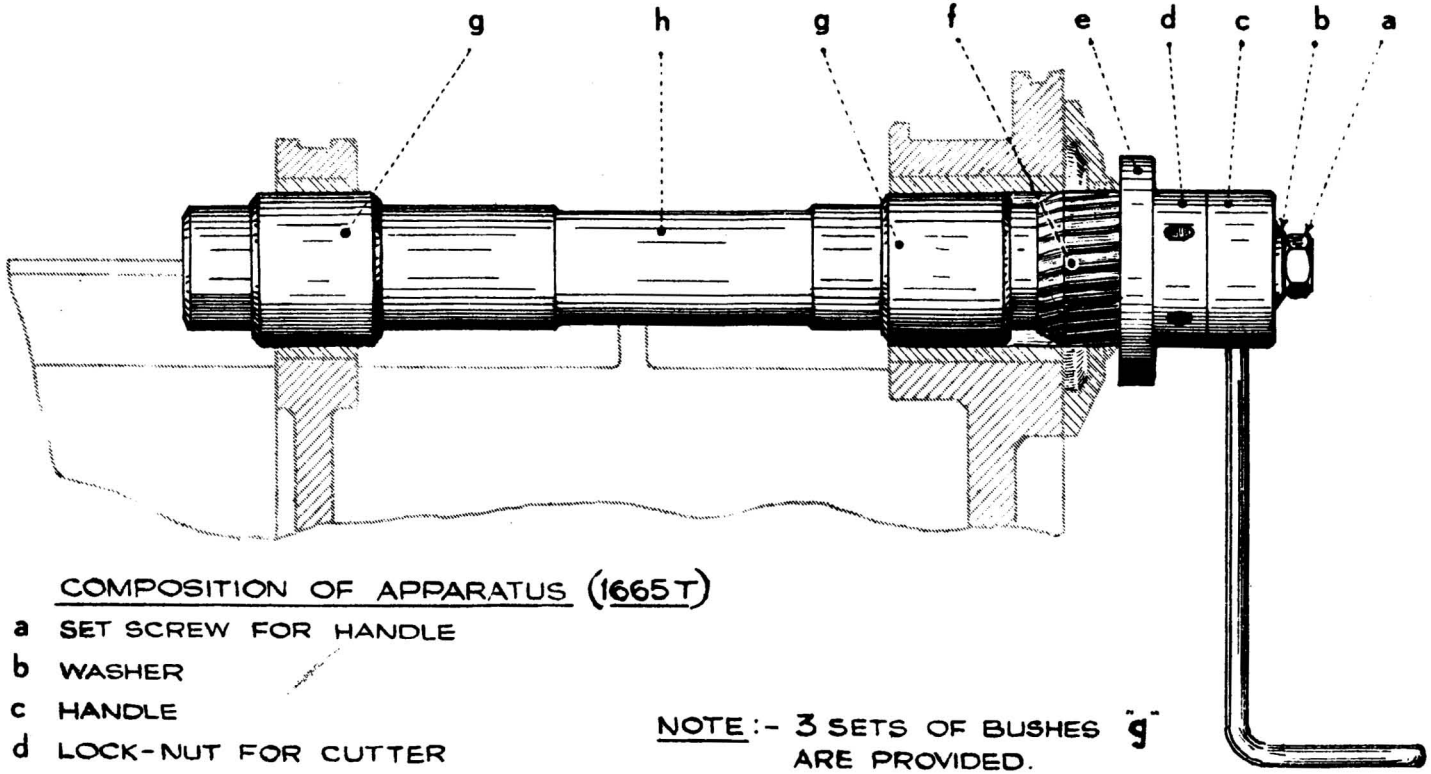

COMPOSITION OF APPARATUS (1665T)

a SET SCREW FOR HANDLE
b WASHER
c HANDLE
d LOCK-NUT FOR CUTTER
e SAFETY RING
f CUTTER
g ALIGNMENT BUSH
h MANDREL CARRYING CUTTER

NOTE:- 3 SETS OF BUSHES "g" ARE PROVIDED.

1. OUTER DIA. 50 m.m. (For bearings of original bore)
2. OUTER DIA. 49.5 mm. (For bearings after 1st cut)
3. OUTER DIA. 49 mm. (For bearings after 2nd cut)

The principal items of this apparatus can be used on all models.

— FITTING OF OIL BAFFLE PACKING —

Fig. 1. FITTING PACKINGS.

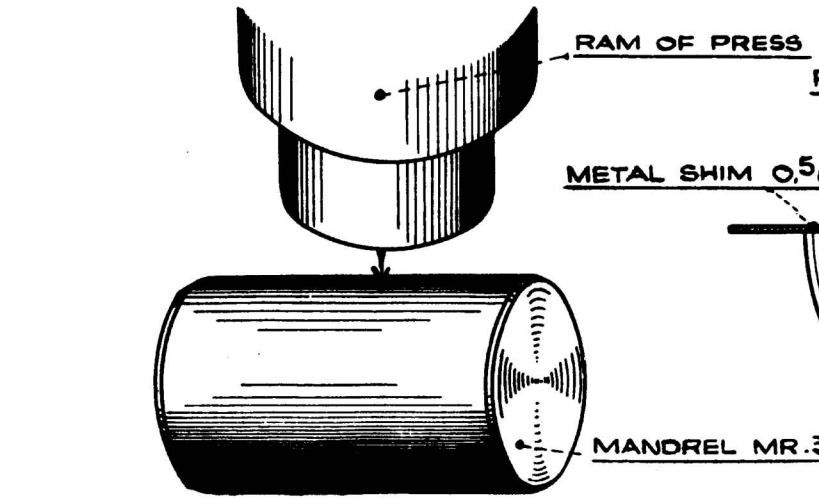

— Fig. 2. —

PREPARING PACKING FOR ASSEMBLY.

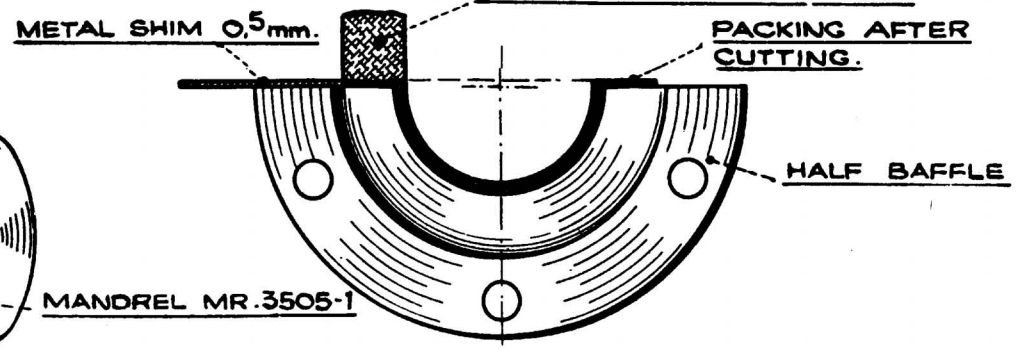

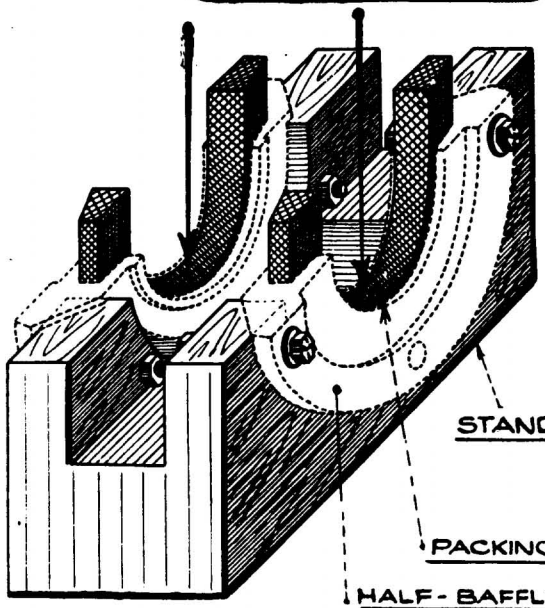

— Fig. 3. —

STAND. MR. 3505-2

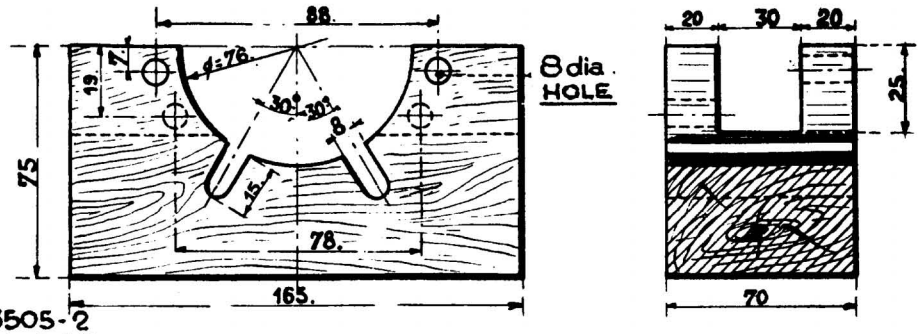

MANDREL. MR. 3505-1

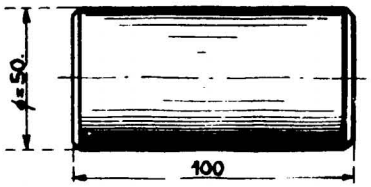

— ENGINE —

— FITTING GUDGEON PIN CIRCLIPS —

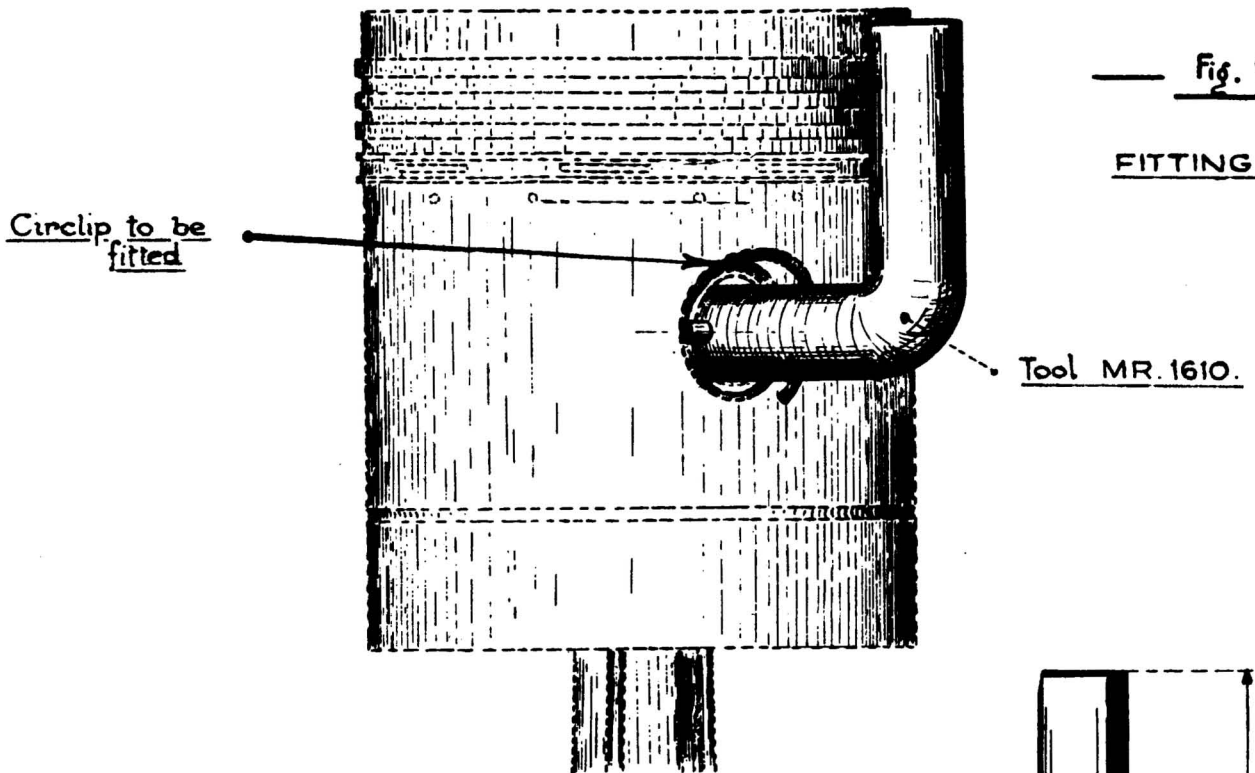

— Fig. 1. —

FITTING CIRCLIP.

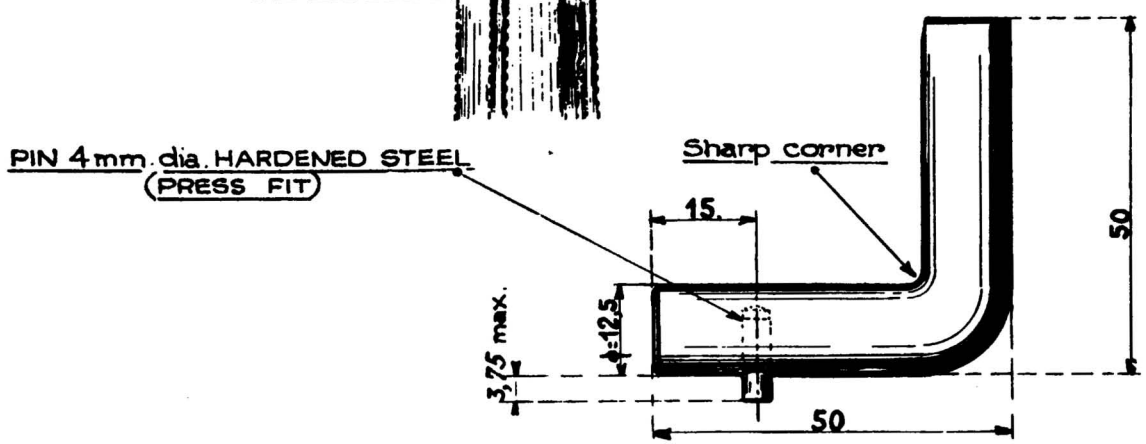

— Fig. 2. —

DETAIL OF TOOL MR. 1610.

—ENGINE—

— PRECAUTIONS WHEN ASSEMBLING —

FITTING OF SUMP GASKETS.

—Fig. 1.—

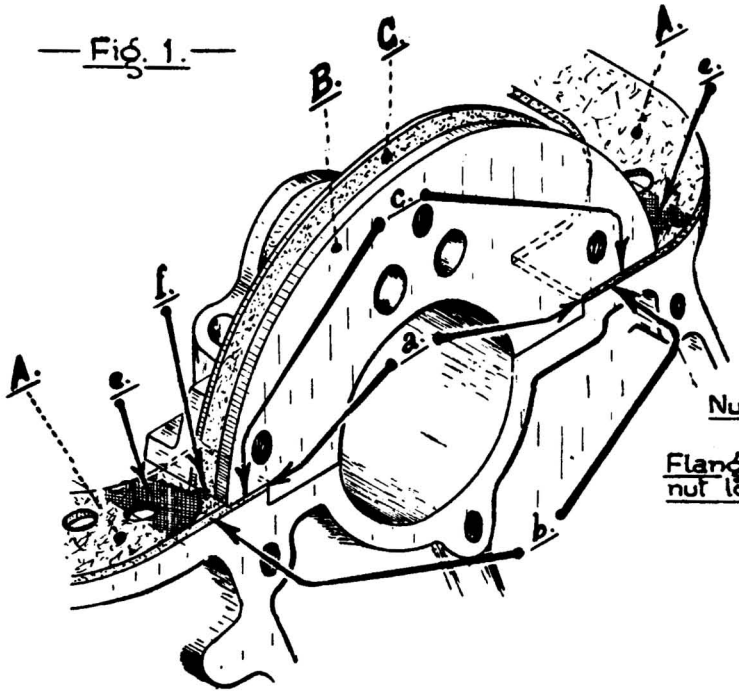

POSITION OF LOCK-PLATES FOR BIG END NUT FITTING.

Square-cornered flange of both lock-plates must butt at 'h' in order to prevent nuts rotating anti-clockwise.

—Fig. 2.—

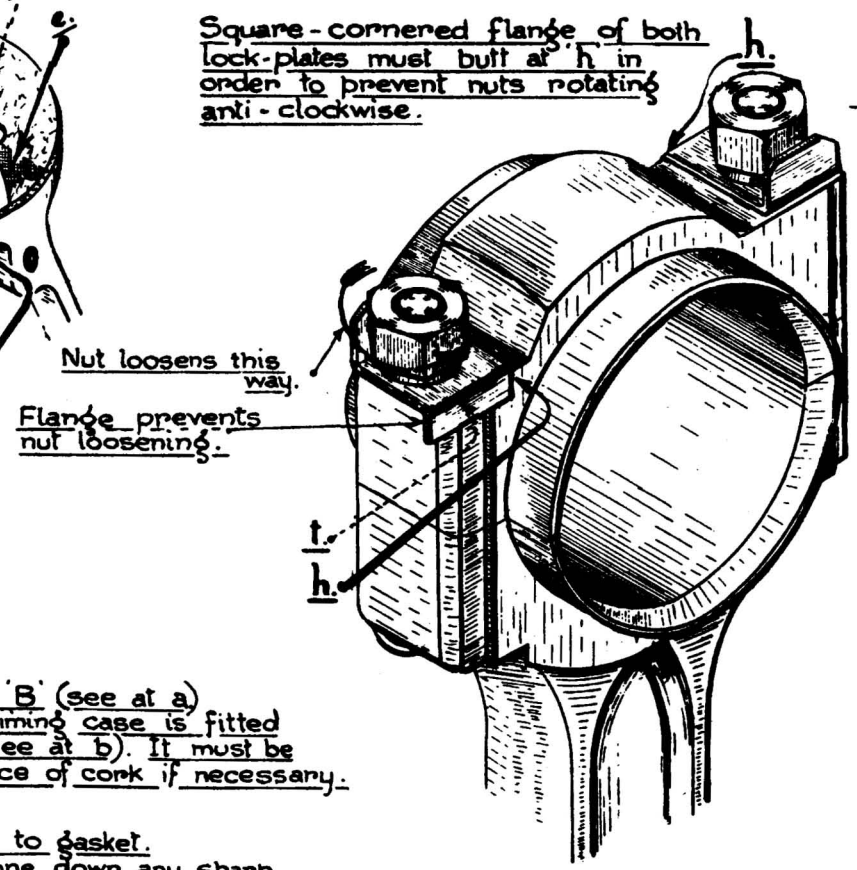

1. Gasket 'A' must butt against bearing cap 'B' (see at a). It must be flush with face against which timing case is fitted and thus preventing any oil escaping (see at b). It must be pinched under cap (see at 'c'); add a piece of cork if necessary.

2. Make certain sump face fits snug at 'e' to gasket. If necessary add metal and reface. Stone down any sharp edges at f without creating rounded or chamfered surfaces in order not to injure circular cap gasket 'C' when fitting sump.
Ends f of circular gasket 'C' in contact with gasket 'A'. and under cap 'B' to be coated with 'HERMETIC'.

— ENGINE —

— ENGINE STANDS —

— Fig. 1. —

USE OF STAND MR. 3300.20
FOR ENGINE IN
INVERTED POSITION.

— Fig. 2. —

USE OF STAND MR.3300.30
FOR ENGINE IN
UPRIGHT POSITION

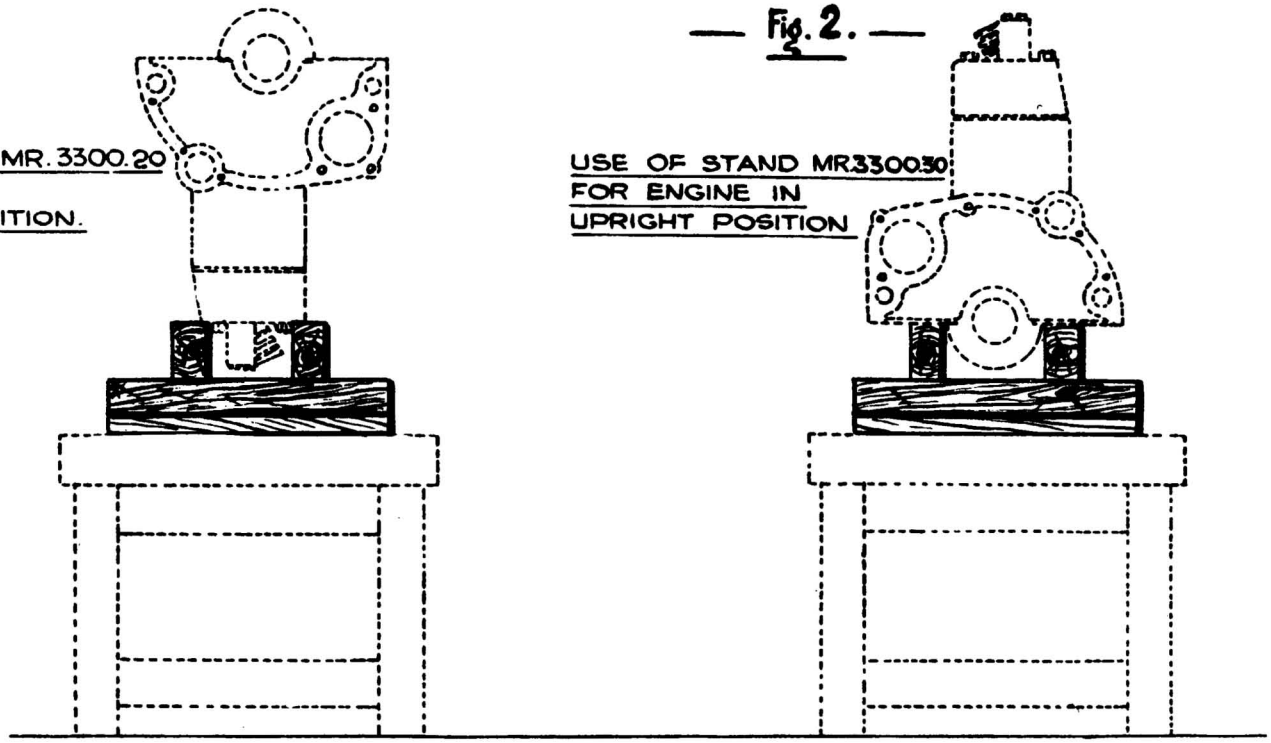

STAND MR. 3300. 20

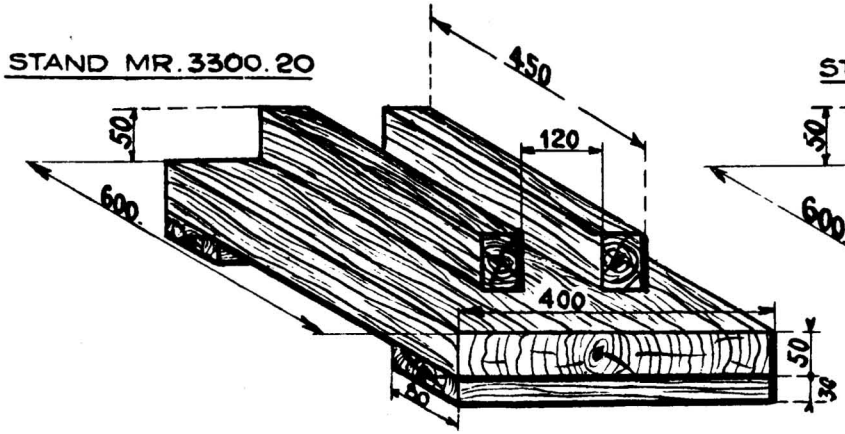

STAND MR. 3300. 30

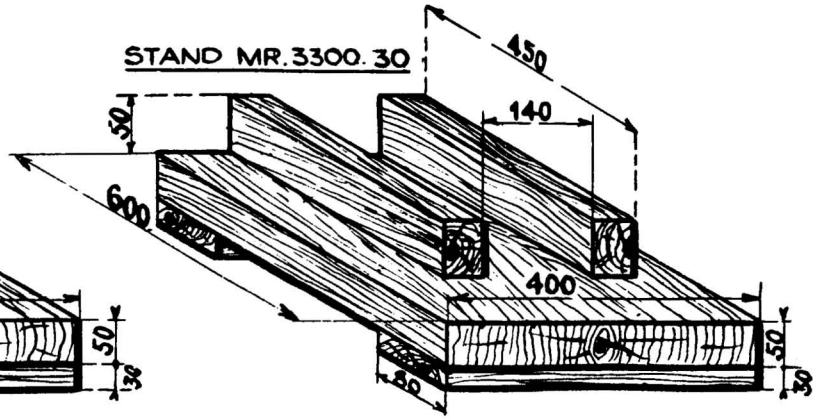

— FITTING PISTONS INTO BARRELS —

Fig. 1. - USE OF RING.

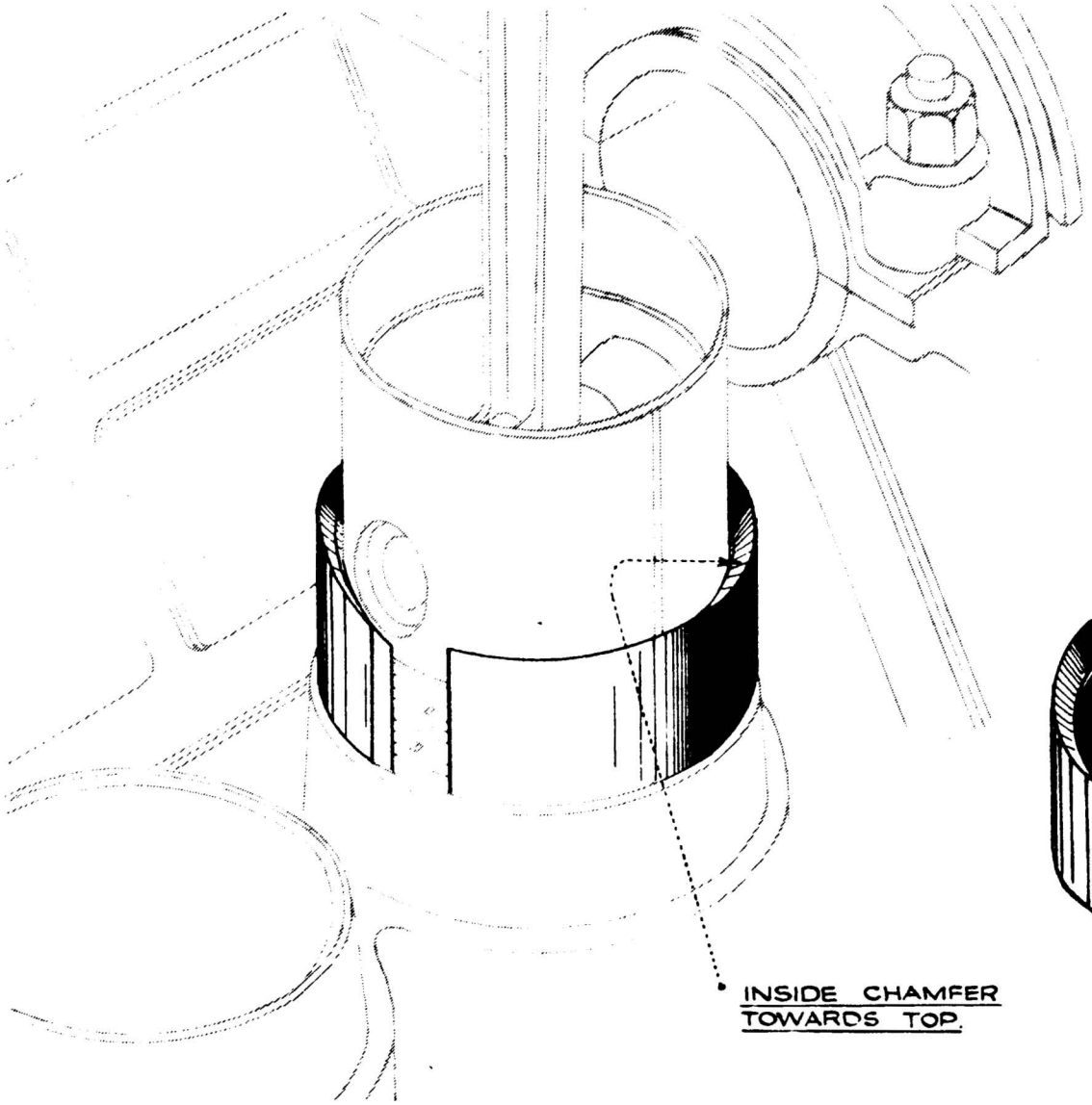

Fig. 2. - RING (1656 T)

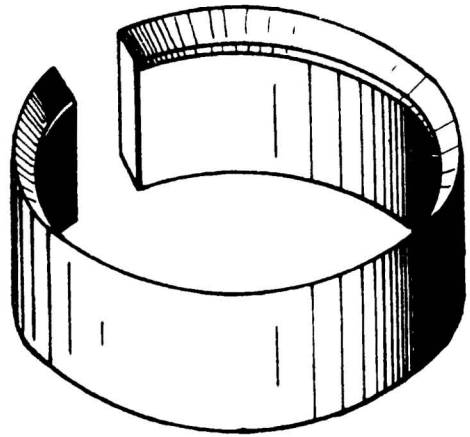

— GAUGING HEIGHT OF BARRELS —

— Fig. 1. —

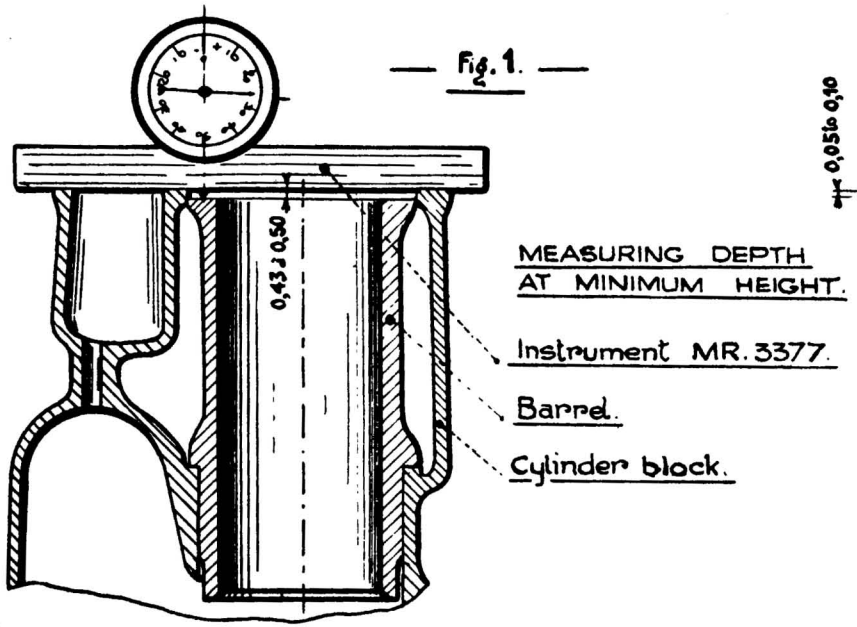

— Fig. 2. —

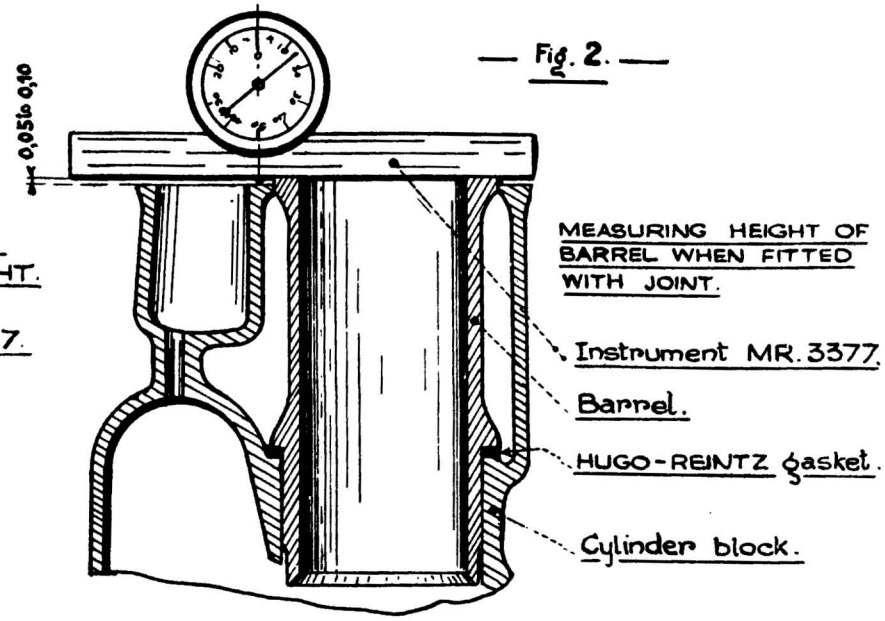

INSTRUMENT MR. 3377.

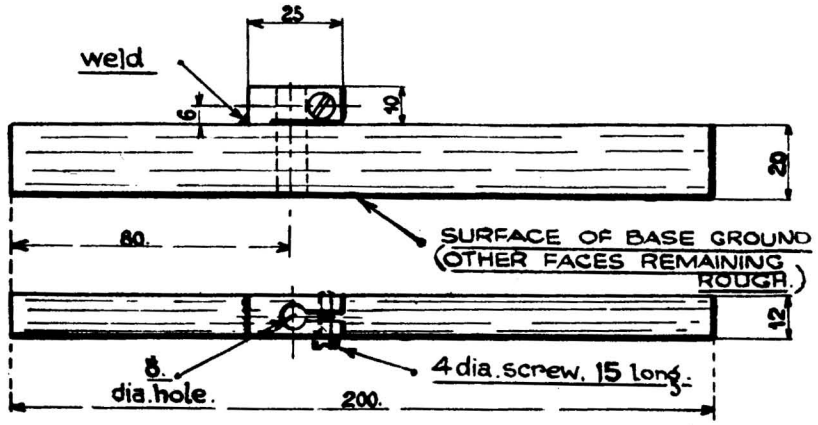

1. PREPARING INSTRUMENT.

PLACE STAND MR. 3377 FITTED WITH CLOCK GAUGE ON SURFACE PLATE OR STRAIGHT EDGE WITH A READING OF APPROX. 2mm. INDICATED. BRING GRADUATED FACE TO ZERO.

2. MEASURING DEPTH AT MINIMUM HEIGHT (WITHOUT LOWER GASKET). Fig. 1.

PLACE INSTRUMENT PREPARED AS ABOVE ON BLOCK FACE WITH POINTER CONTACTING BARREL. TAKE READINGS AT 4 CARDINAL POINTS ON BARREL. TAKE AVERAGE.

3. MEASURING HEIGHT OF BARREL (GASKET IN POSITION) Fig. 2.

PLACE INSTRUMENT ON BARREL WITH POINTER CONTACTING CYLINDER BLOCK. THE DIFFERENCE IN READINGS SHOULD BE BETWEEN 0,05 AND 0,10

—ENGINE—

—SETTING TIMING WHEELS—

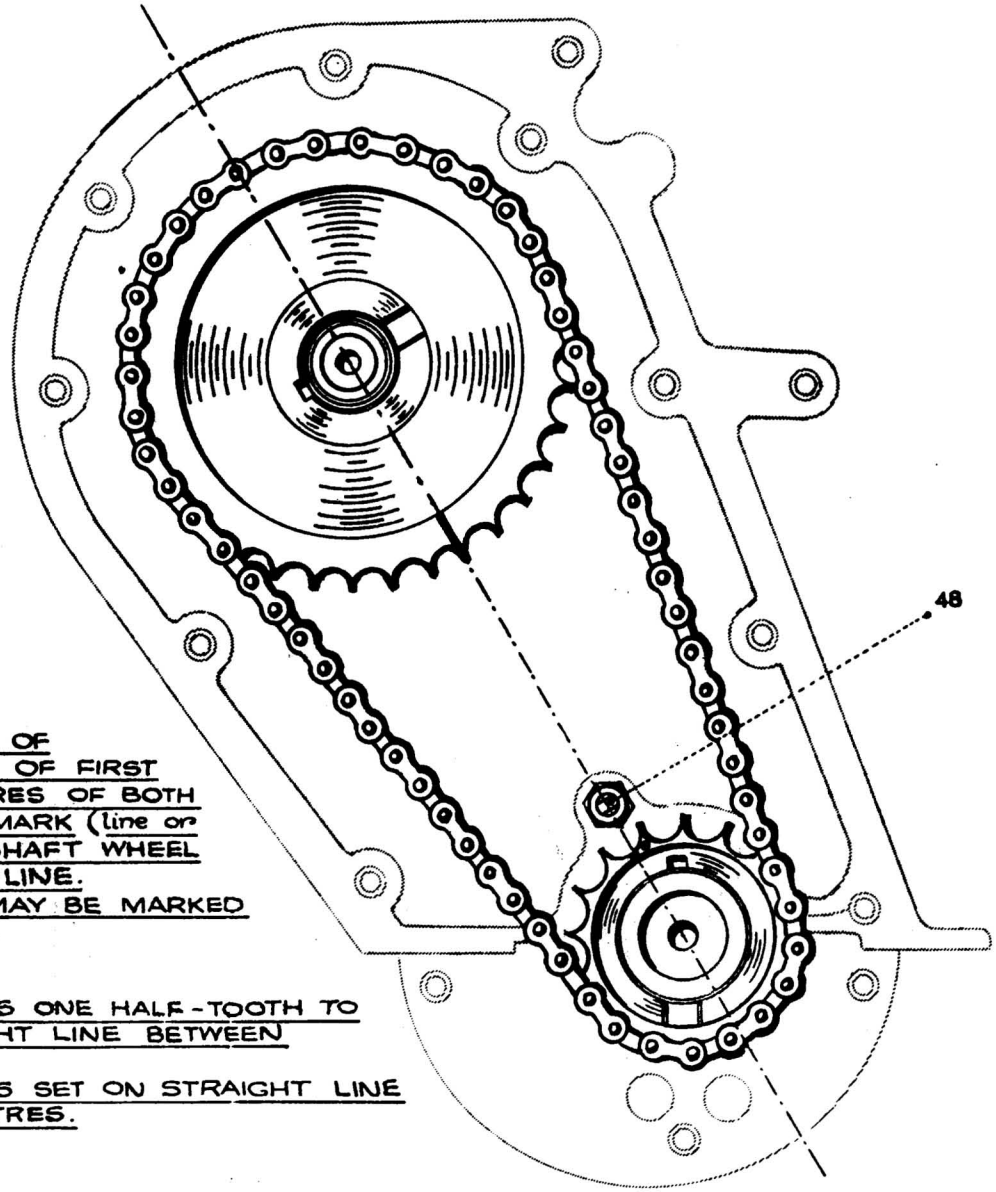

ENGINE BEING AT TOP DEAD CENTRE AT END OF COMPRESSION STROKE OF FIRST CYLINDER, THE CENTRES OF BOTH WHEELS AND TIMING MARK (line or centre-punch) OF CAMSHAFT WHEEL MUST BE IN STRAIGHT LINE.

CRANKSHAFT WHEEL MAY BE MARKED (line or centre punch):

1. ON TOOTH.
2. BETWEEN TEETH.

IN CASE 1. THE MARK IS ONE HALF-TOOTH TO THE RIGHT OF STRAIGHT LINE BETWEEN WHEEL CENTRES.

IN CASE 2. THE MARK IS SET ON STRAIGHT LINE BETWEEN WHEEL CENTRES.

— ENGINE —

— WATER PUMP AND DYNAMO DRIVING SHAFT —

Fig. 1. SECTION ON CENTRE LINE OF SHAFT.

Fig. 2. SPANNER (1640.T.)

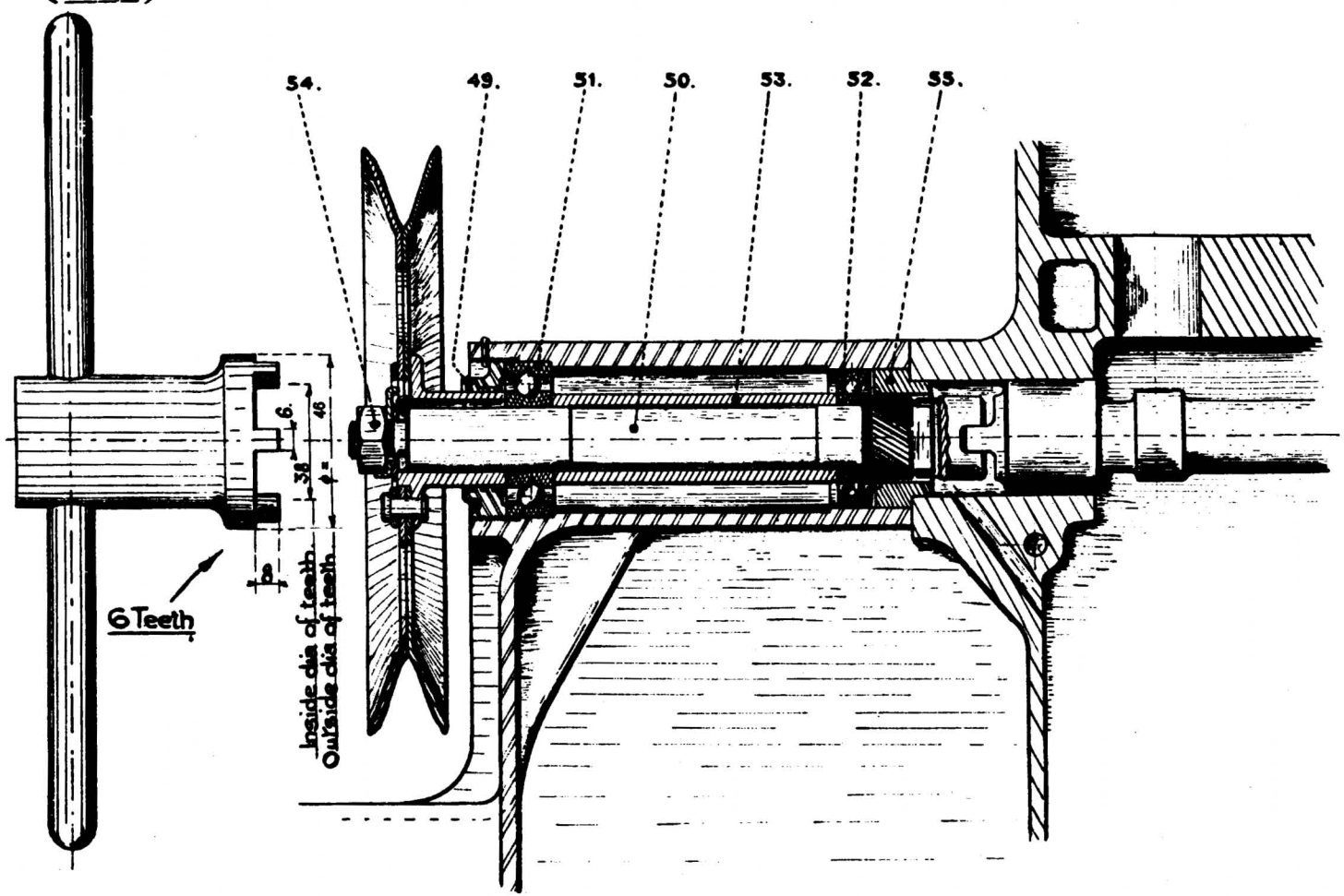

— CARBURETTOR —

— SECTION AND EXTERNAL VIEWS —

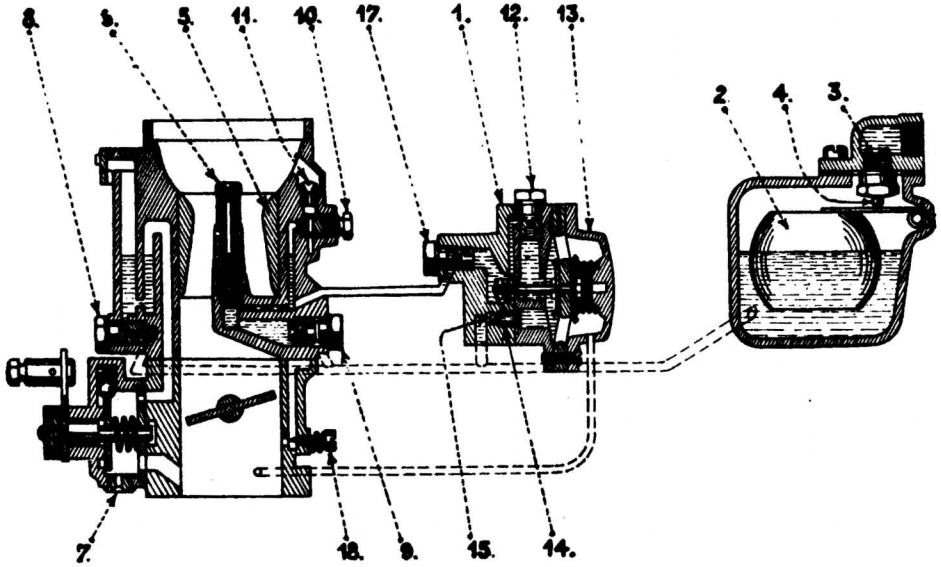

SPANNER
(1620.T.)

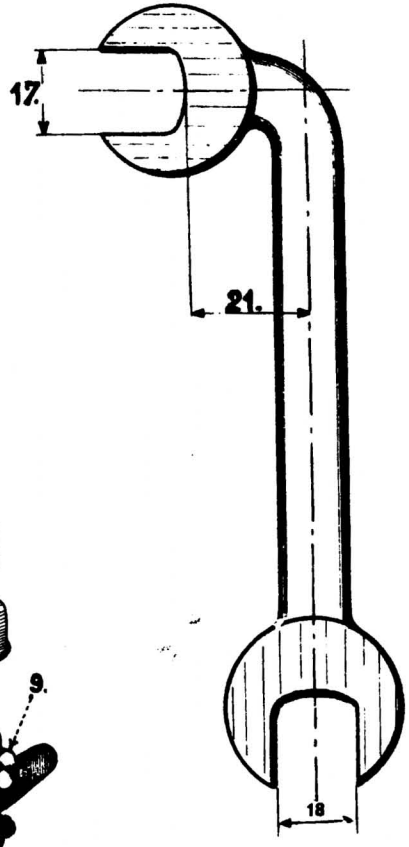

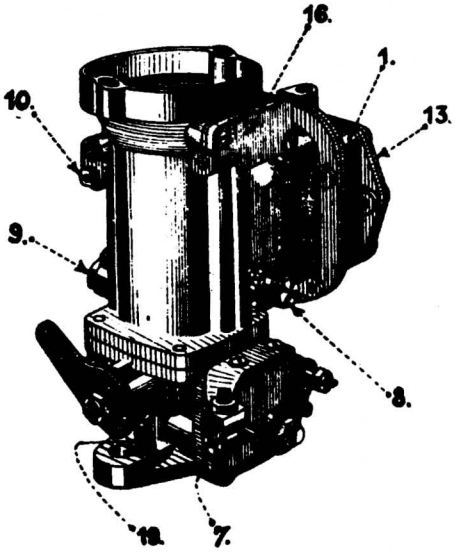

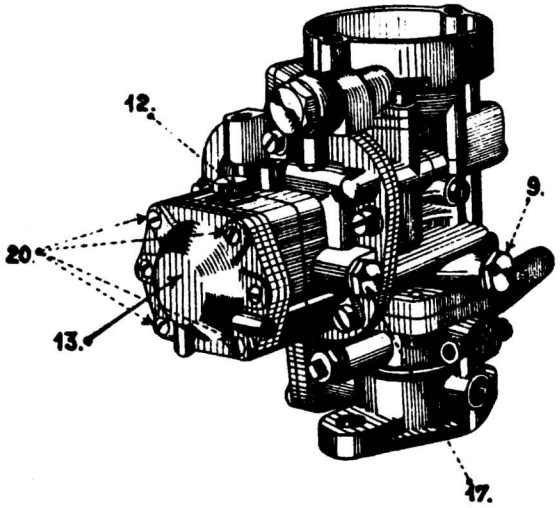

— AIR INTAKE SILENCER —

— SECTIONAL VIEWS —

— Fig. 1. — LONGITUDINAL SECTION.

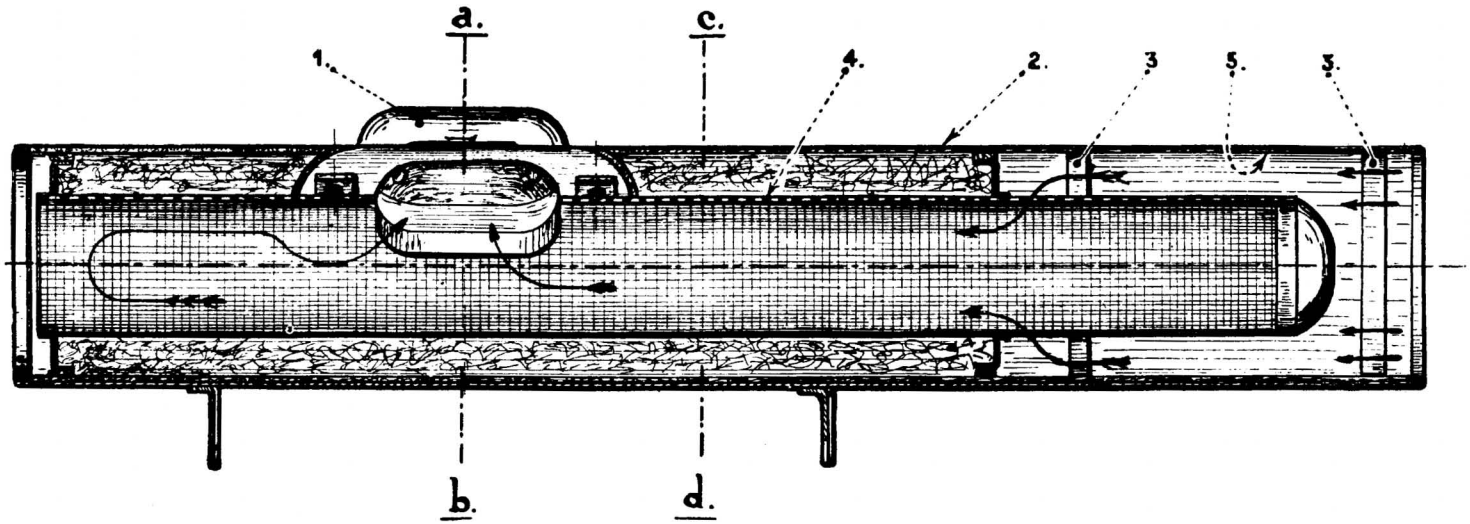

— Fig. 2. — TRANSVERSE SECTION AT ab

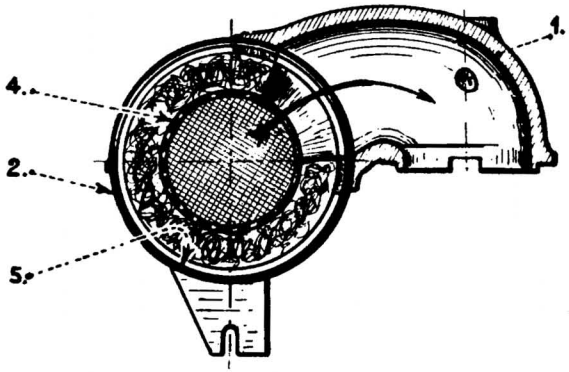

— Fig. 3. — TRANSVERSE SECTION AT cd

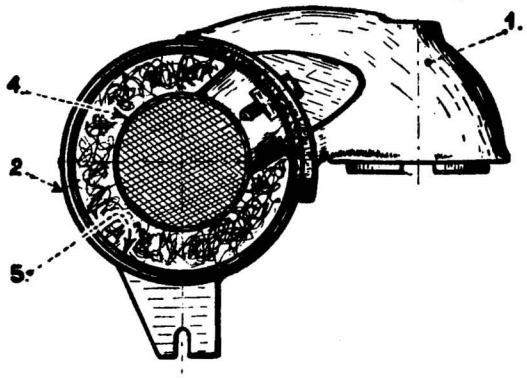

— PETROL PUMP —

— ASSEMBLY: VERTICAL SECTION —

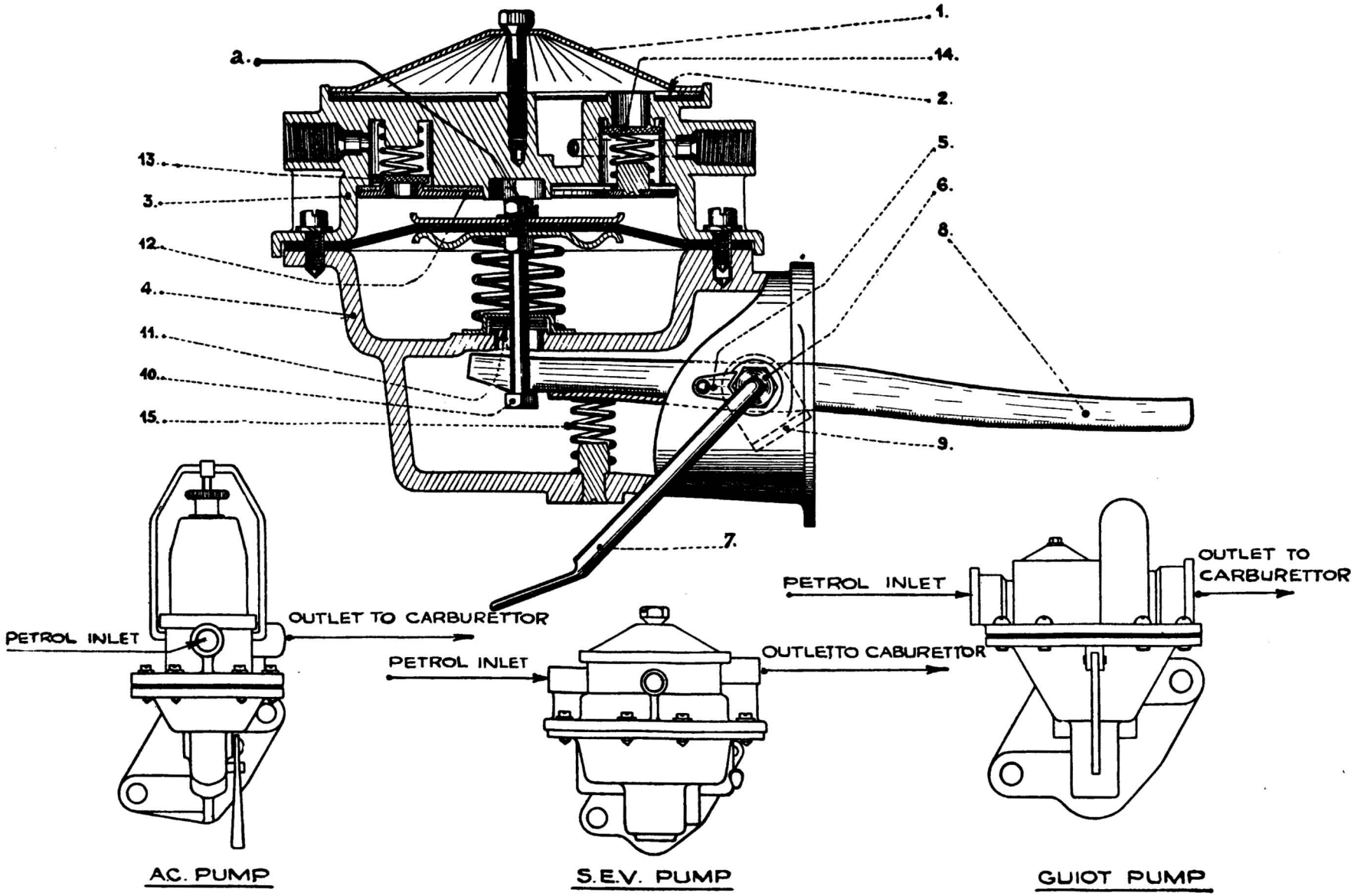

—PETROL PUMP—

— CHECKING FOR AIR LEAKS—

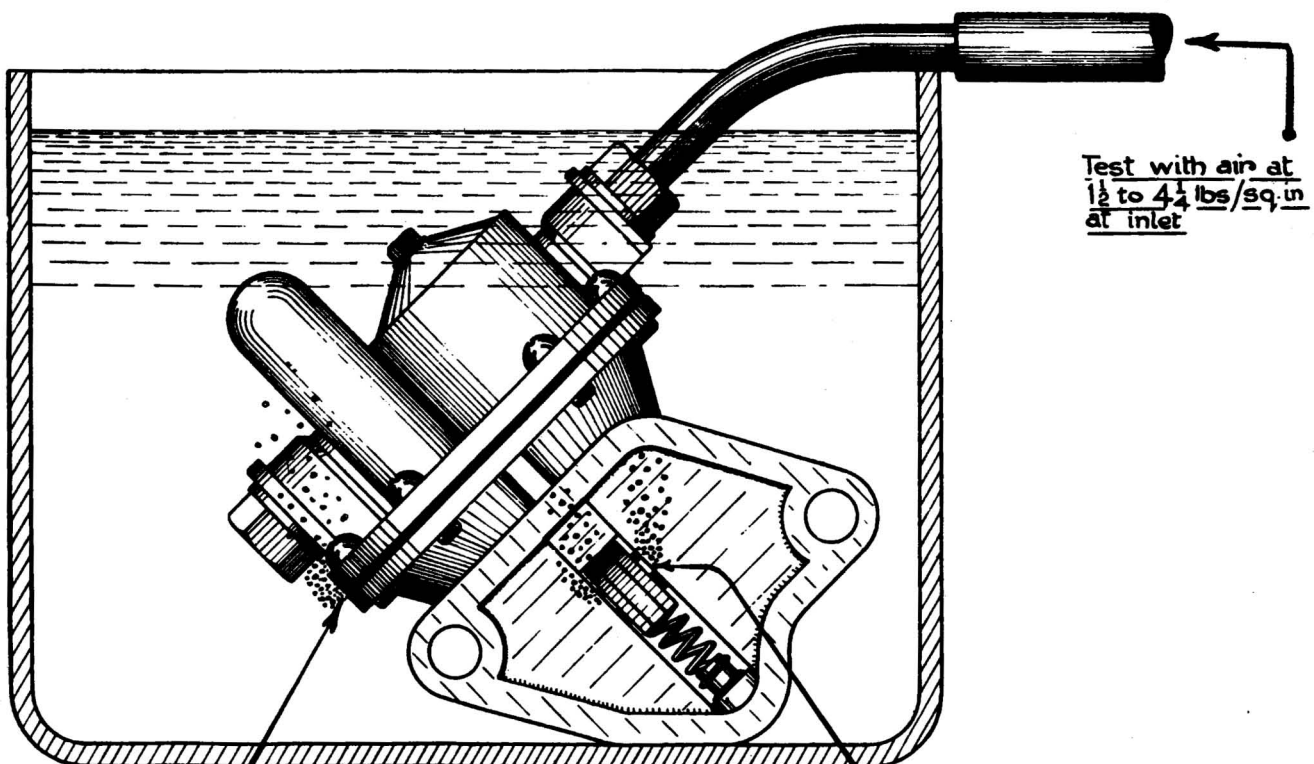

FAULTY ASSEMBLY.
Leak at pump assembly point.

FAULTY DIAPHRAGM.
Leak at operating arm orifice.

CLUTCH

ASSEMBLY AND SECTION

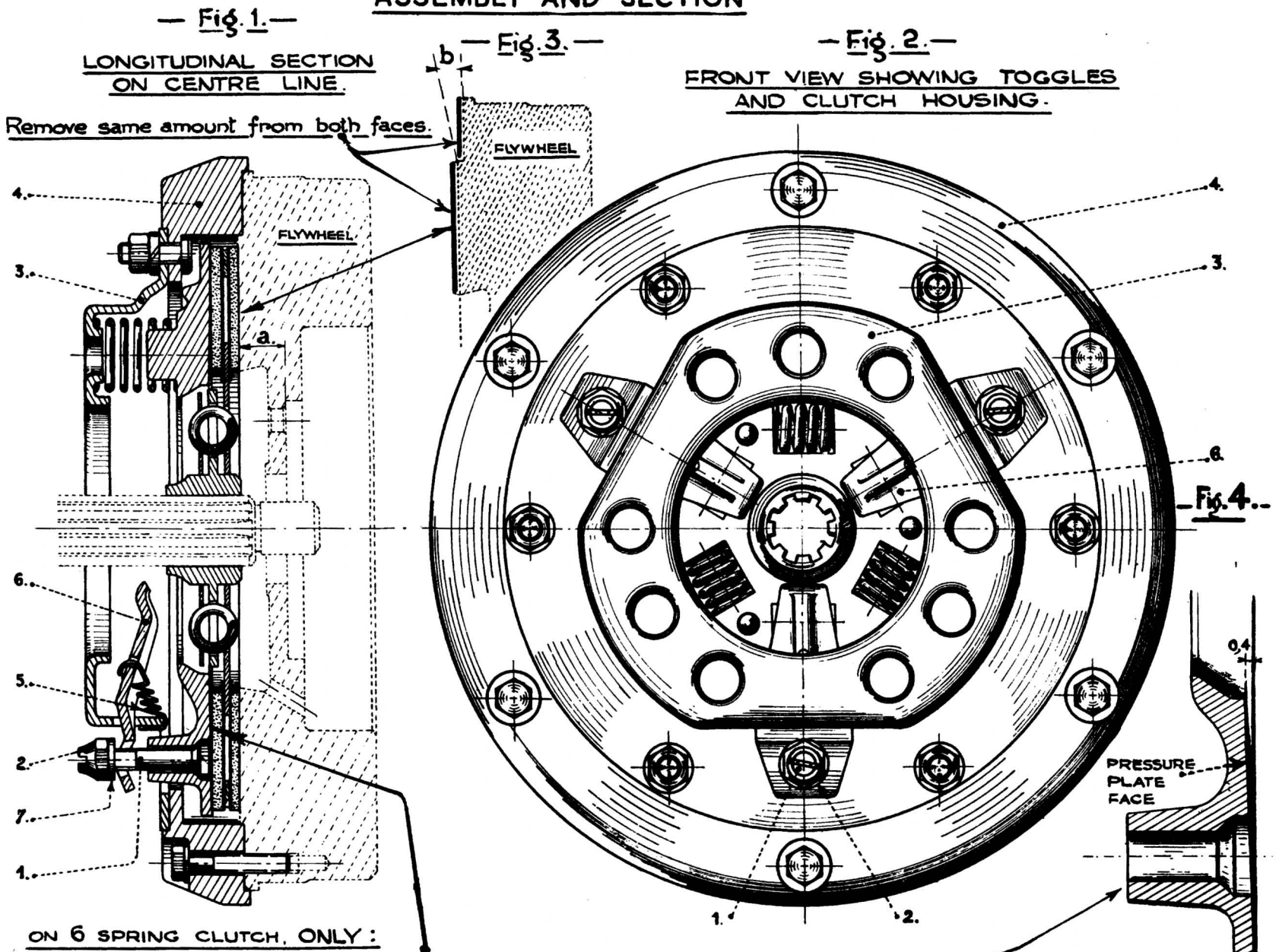

ON 6 SPRING CLUTCH, ONLY:

THE PRESSURE PLATE FACE IS NOT FLAT BUT SLIGHTLY CONCAVE. (See Fig. 2.)

— CLUTCH —

— TOGGLE ADJUSTMENT —

Fig.1.- APPARATUS FOR ADJUSTING CLUTCH. 1701.T.

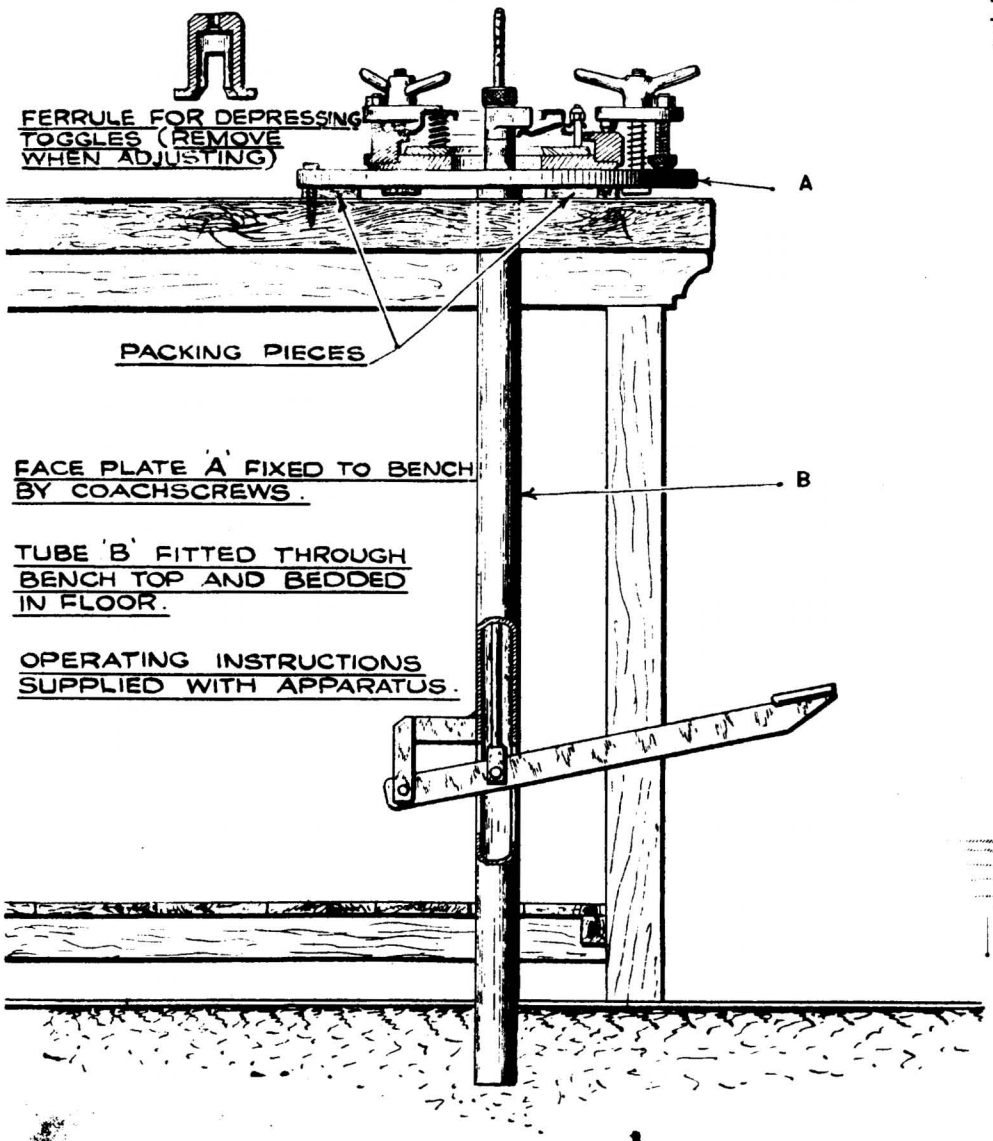

Fig.2- MECHANISM IN POSITION "CLUTCH IN"

THESE DIMENSIONS CAN ONLY BE MEASURED WHEN MOUNTED ON FACE PLATE.

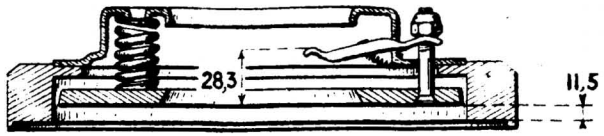

Fig.3- CHECKING ADJUSTMENT.

WHEN PIVOTED, FINGER 'C' MUST SLIDE OVER UPPER FACE OF TOGGLE.

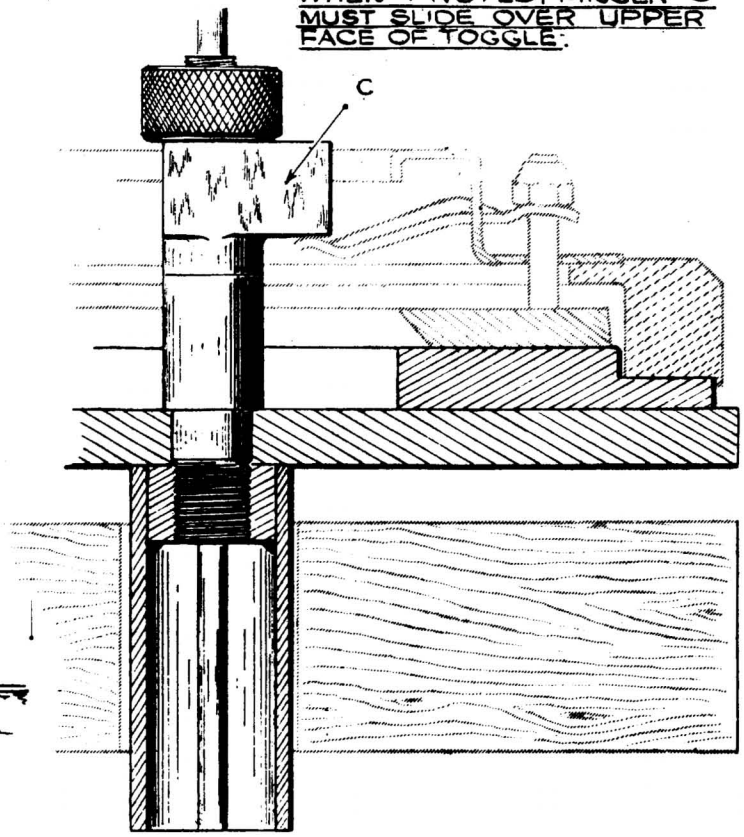

—CLUTCH—

— TOGGLE ADJUSTMENT (SIMPLIFIED METHOD) —

Fig. 1. METHOD OF MOUNTING.

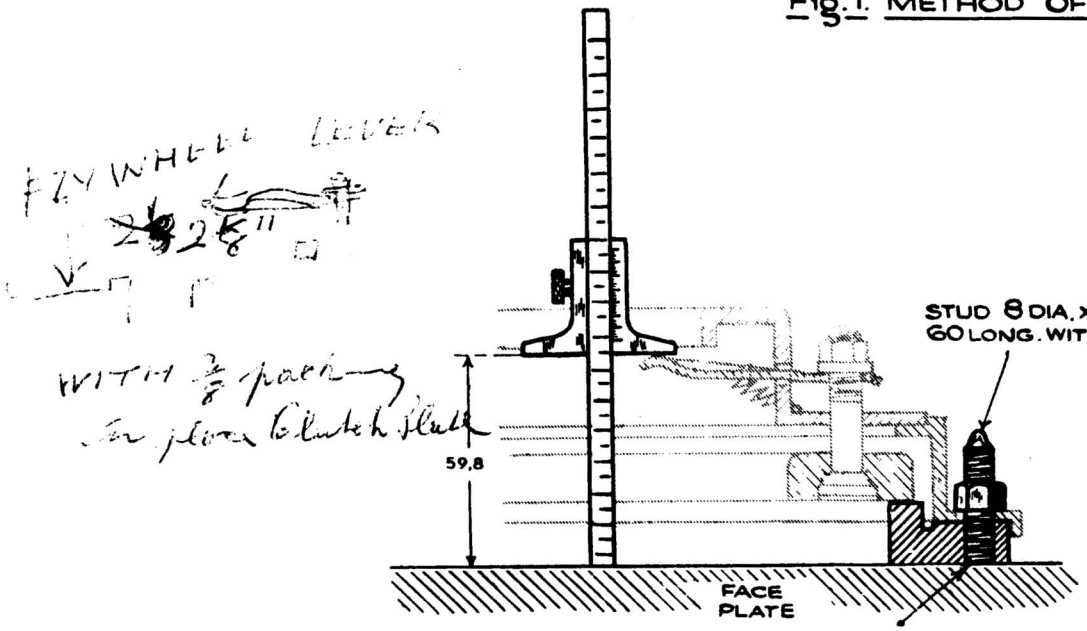

END OF STUDS FLUSH AND LOCKED BY PIN-PUNCH.

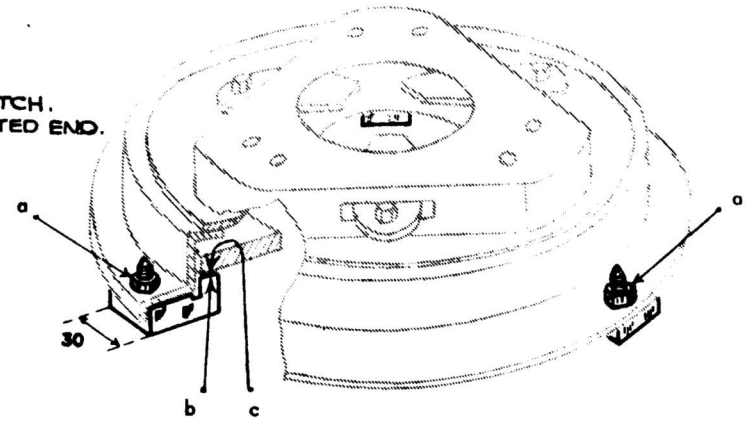

Fig. 2. BLOCK MR. 3457/11.

REMARKS: THIS ARRANGEMENT IS TO BE ADOPTED WHEN OTHER MEANS ARE NOT AVAILABLE.

DURING ADJUSTMENT IT IS NECESSARY TO APPLY MOTION TO THE TOGGLES EITHER BY A PRESS OR DRILLING MACHINE.

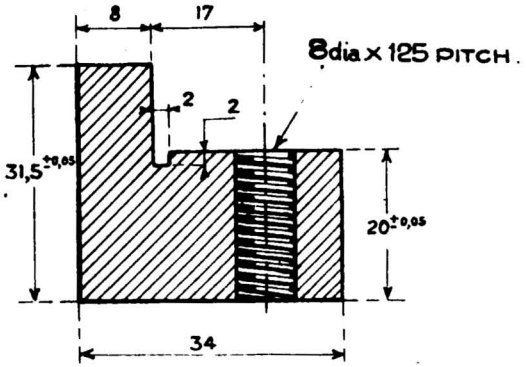

TIGHTEN 3 NUTS 'a' SUCCESSIVELY WITH THE SAME NUMBER OF TURNS.

AFTER TIGHTENING WITH 'a' ENSURE THAT BLOCKS AT 'b' ARE IN CONTACT ON RING AT 'c'

3 BLOCKS ARE NECESSARY FOR ADJUSTMENT.

— GEARBOX —

—STAND FOR DISMANTLING & REASSEMBLING GEARBOX—

MR.3053

For any other information regarding this stand, please consult us.

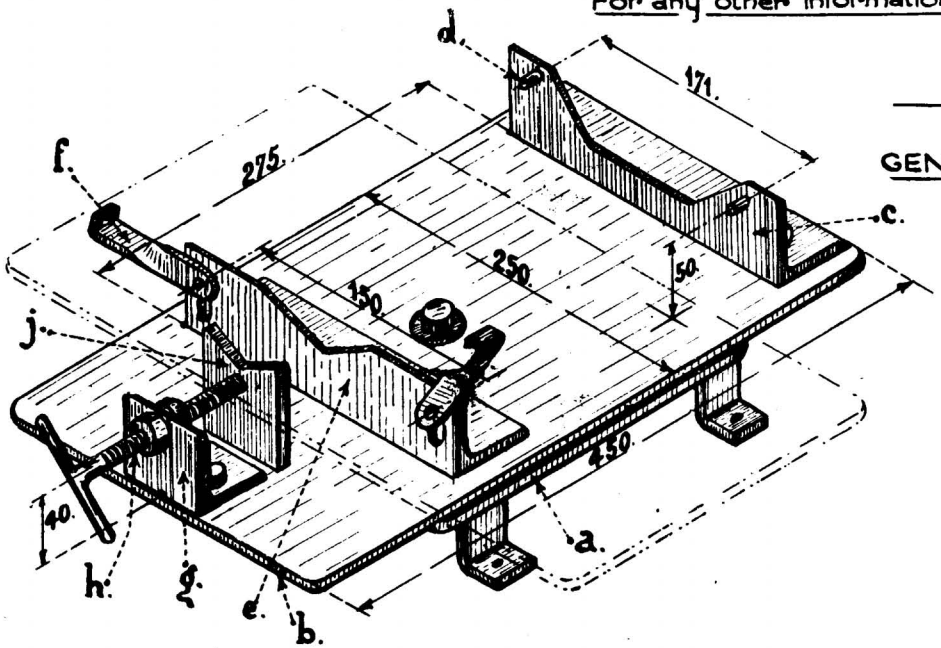

— Fig. 1. —

GENERAL VIEW AND MAIN DIMENSIONS.

— Fig. 2. —

VIEW OF BOX FITTED ON STAND.

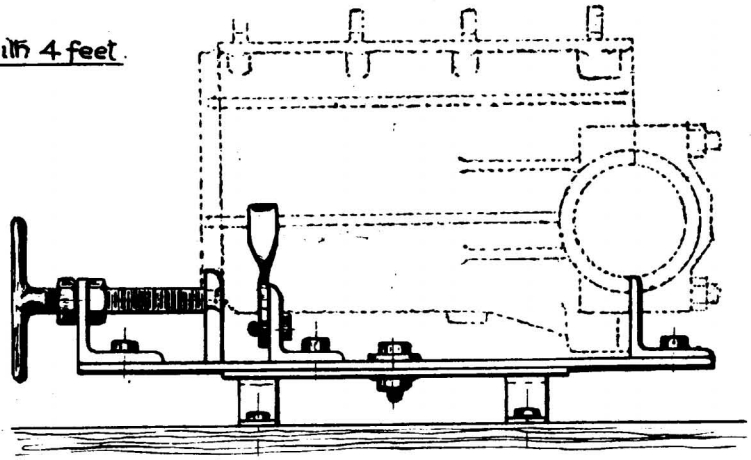

a: Base plate { Square as above 250 x 250, 6 thick, with 4 feet. or circular 250 dia. with 3 feet.

b. Top plate swivelling on base plate a.

c. Gearbox stand with 2 locating pins.

d. Locating pins.

e. Stand with 2 clips.

f. Clips.

g. Angle plate with locking screw.

h. Locking screw.

j. Sliding plate, fitting under gearbox.

— GEARBOX —

— GEARBOX ASSEMBLY —

— Fig. 1. — LONGITUDINAL SECTION ON CENTRE - LINE.

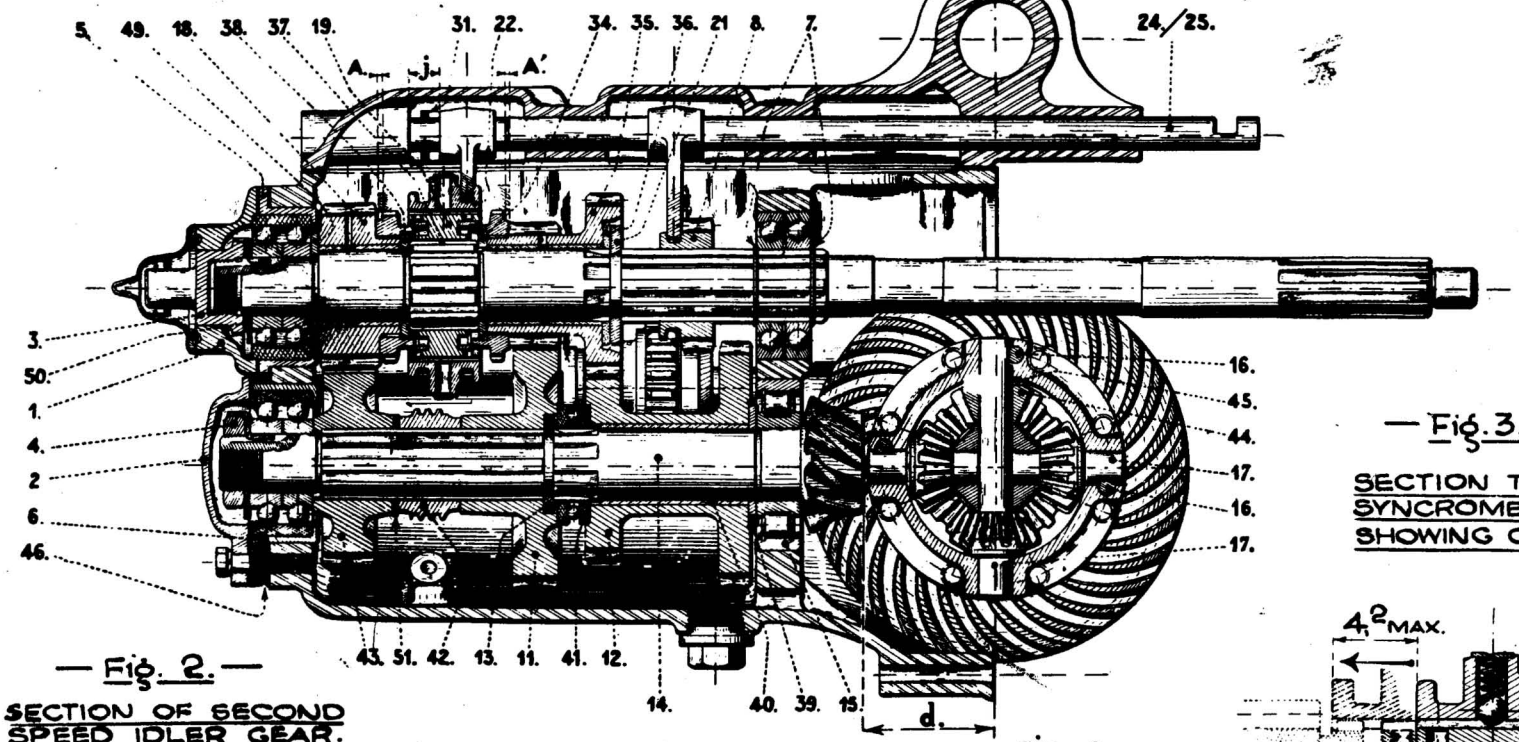

— Fig. 3. —

SECTION THROUGH SYNCROMESH GEAR SHOWING CLEARANCE.

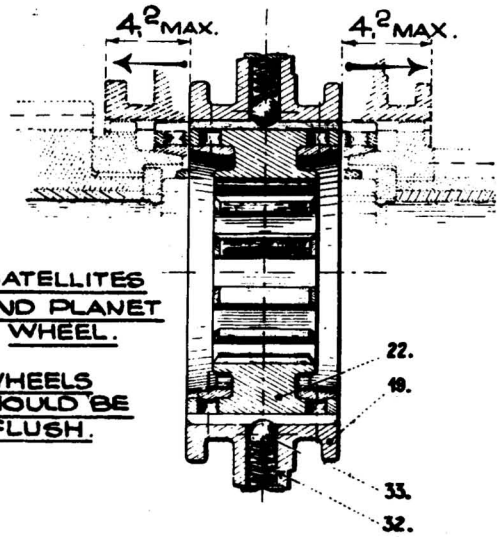

SATELLITES AND PLANET WHEEL.

WHEELS SHOULD BE FLUSH.

— Fig. 2. —

SECTION OF SECOND SPEED IDLER GEAR.

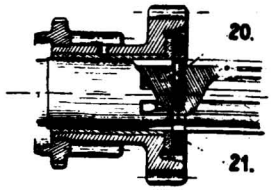

SPLINED WASHER IN POSITION.

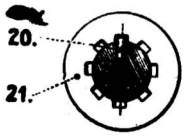

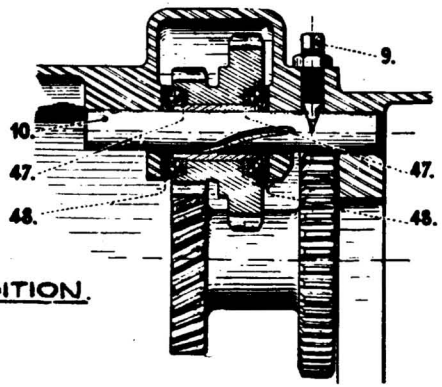

SECTION OF REVERSE SPEED IDLER GEAR.

— Fig. 4. —

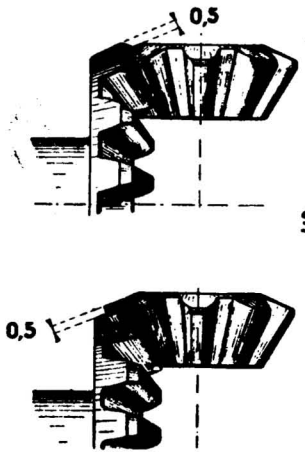

— GEARBOX —

— EXTRACTOR FOR REMOVING COUPLING FLANGE —

— BAR FOR KEEPING OPPOSITE FLANGE IN POSITION —

THIS EXTRACTOR COMPRISES A COUPLING FLANGE OF THE USUAL TYPE : a, TO WHICH IS WELDED A THREADED BOSS : b, THIS IS FITTED WITH A SCREW : c, WHICH PRESSES AGAINST THE END OF THE PLANET SHAFT.
Boss : 30 dia ; 25 long.
Screw : 16 dia. x 200 pitch.
Length under head 90
End pointed.
Head hexagonal, 31 across flats, 20 long.

EXTRACTOR MR. 3328

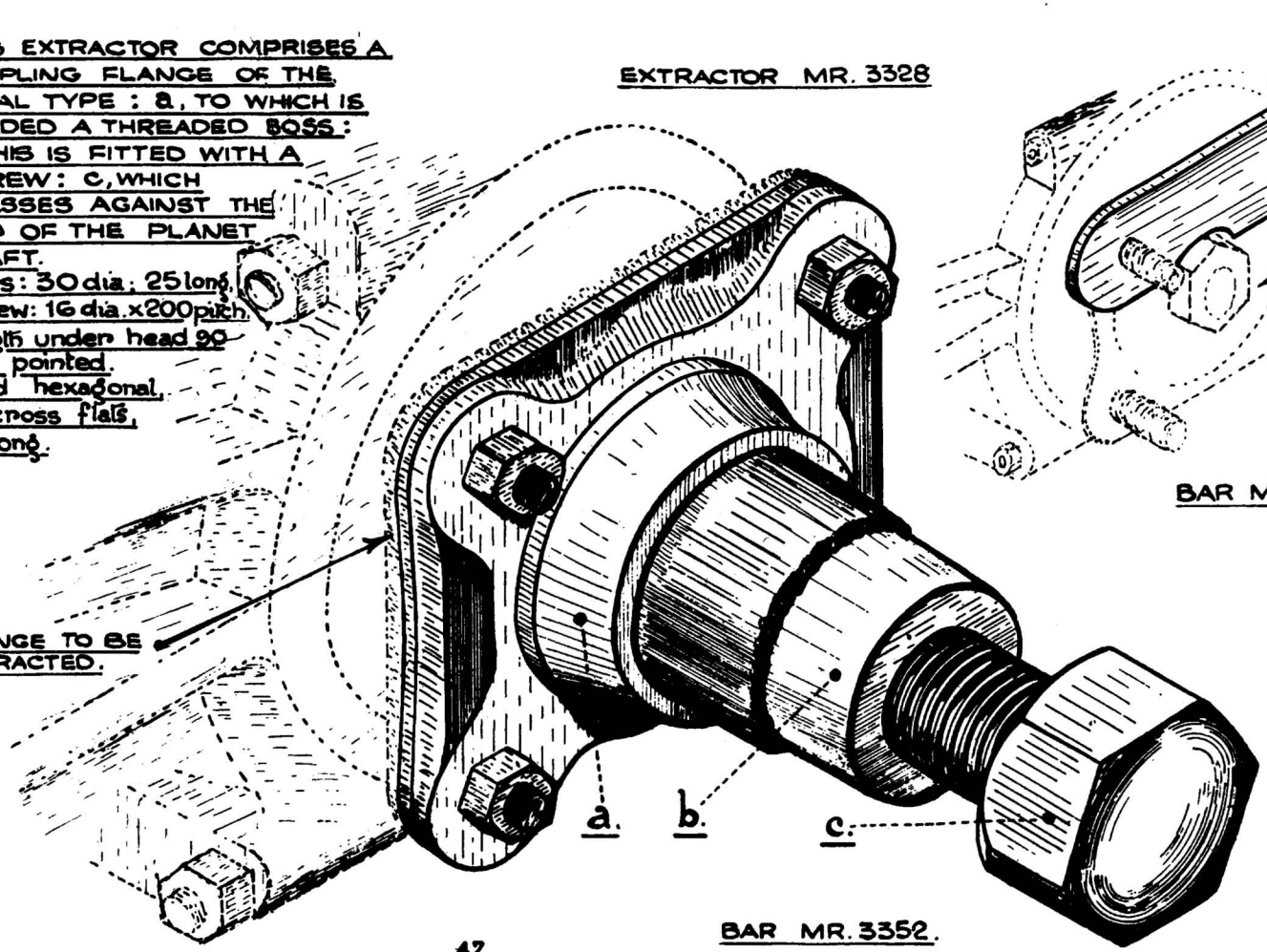

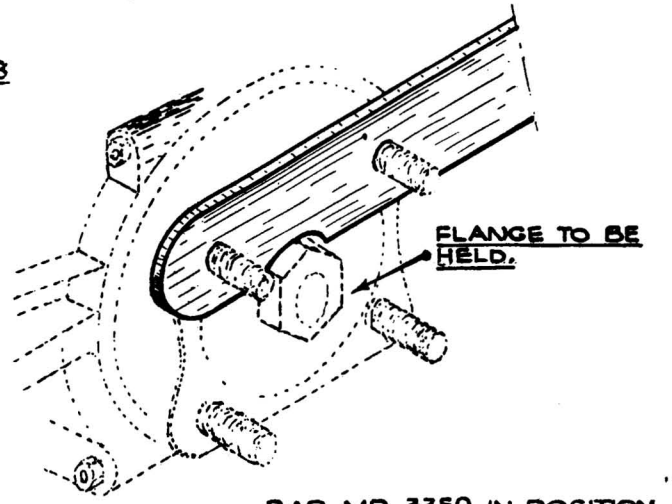

BAR MR 3352 IN POSITION.

BAR MR. 3352.

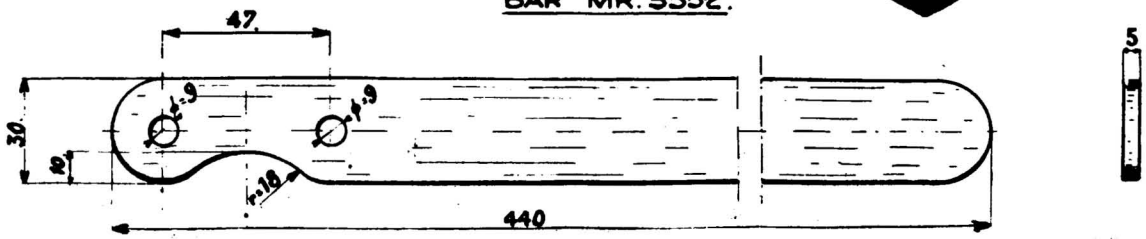

—GEARBOX—

— EXTRACTION OF DIFFERENTIAL BEARING —

USE OF EXTRACTOR

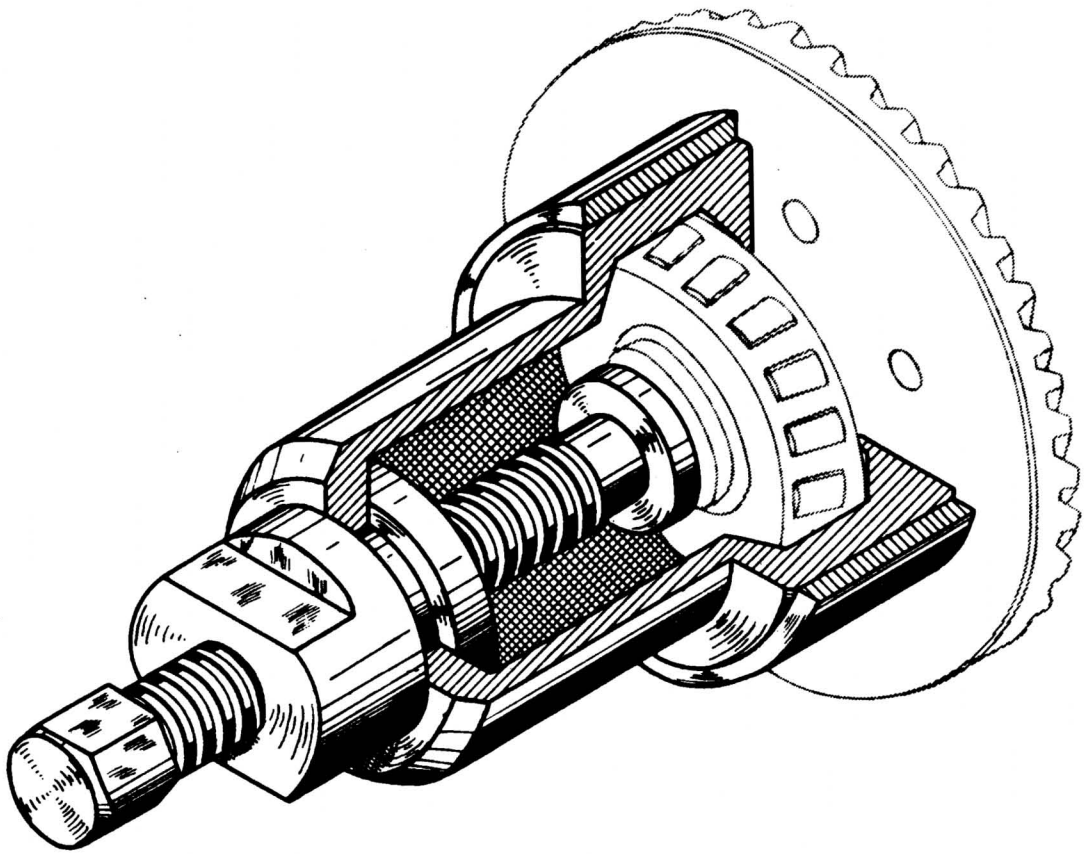

EXTRACTOR BODY 1750T.

SPLIT COLLET, RING, AND THRUST BLOCK 1753T.

— GEARBOX —

— COVER — FORKS — GEAR LOCK (LIGHT TYPE) —

LOCKING SELECTOR FORK SET-SCREW.

Each set screw holding the forks on their shafts must be locked with wire in such a manner that the section under tension is opposed to direction of bolt loosening.

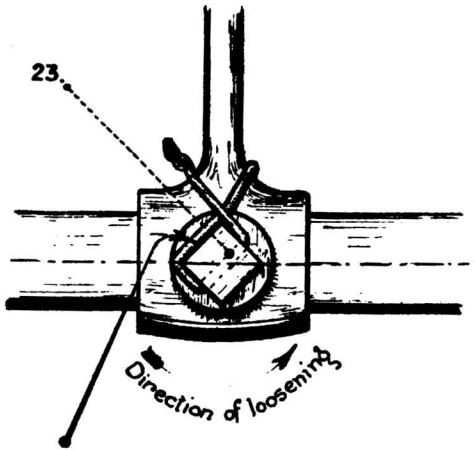

SECTION OF WIRE OPPOSED TO LOOSENING.

DETAIL OF SELECTOR SHAFTS LOCKING DEVICE.

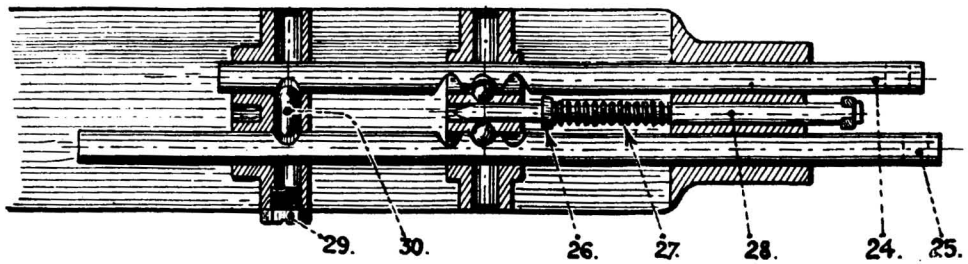

COVER ASSEMBLY INVERTED SHOWING RESPECTIVE POSITION OF FORKS.

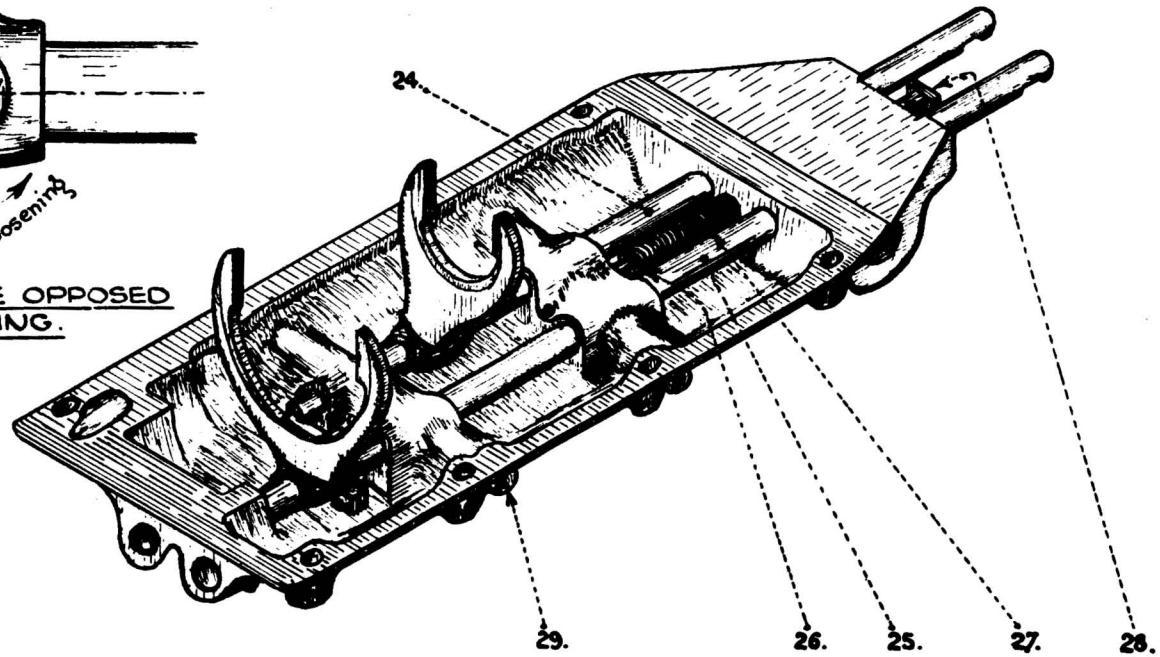

— GEARBOX —

—MOUNTING OF FIXING PLATES—

DISTANCE BLOCK MR. 1525.

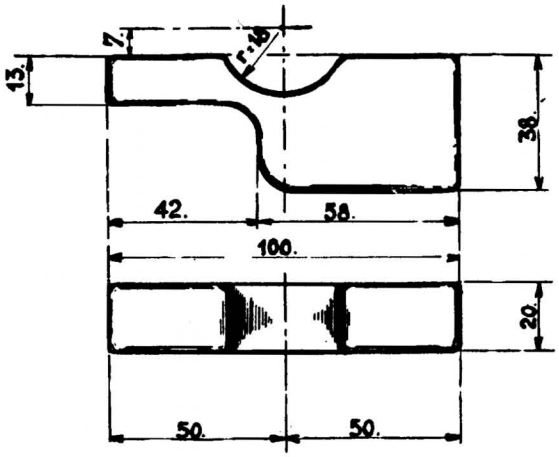

POSITIONING OF BRACKETS.

Brackets a and b must rest on each distance block at either end (see c and d)

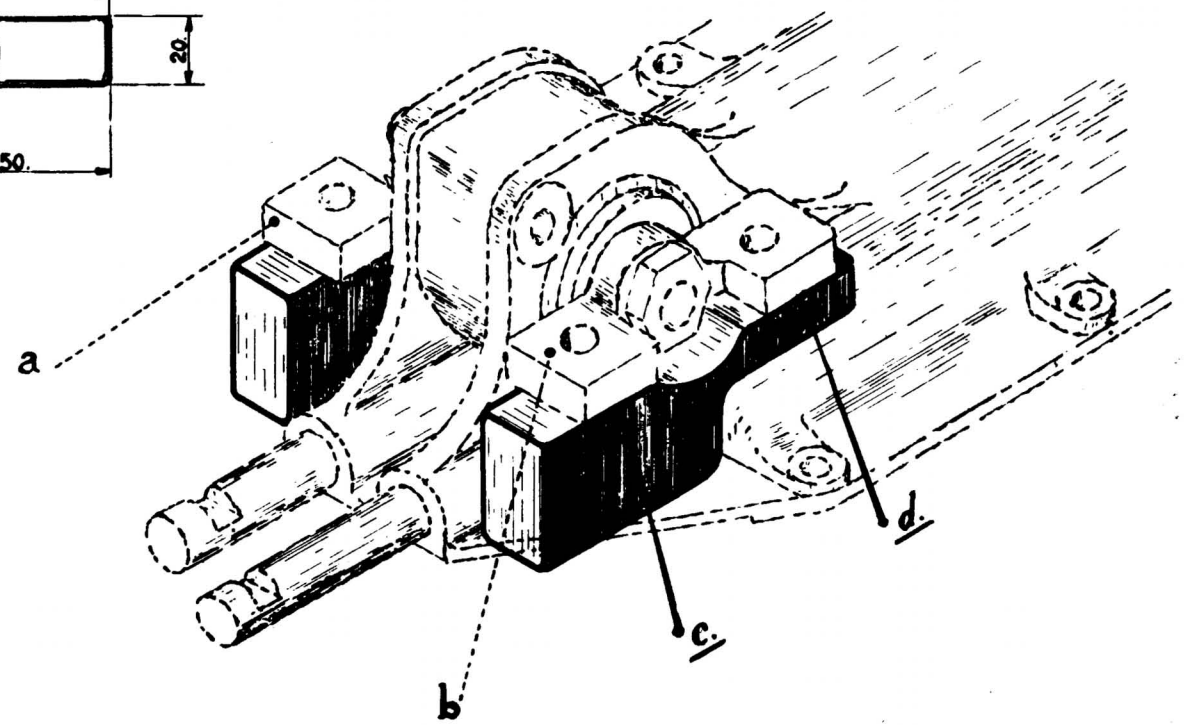

— GEARBOX —

— FITTING SYNCHROMESH GEAR —

TOOL MR.3025 IS MADE OF A CITROEN FRONT WHEEL DRIVE "11" (LIGHT 15 OR BIG 15) SYNCHROMESH CENTRE SLIDE MODIFIED AS FOLLOWS. AFTER MODIFICATION THIS PART CANNOT BE USED IN A GEARBOX.

1. Anneal part.
2. Make 6 tapered grooves to receive balls as shown below.
3. Ease off all splines to get free movement of synchromesh ring.

— Fig.1. —

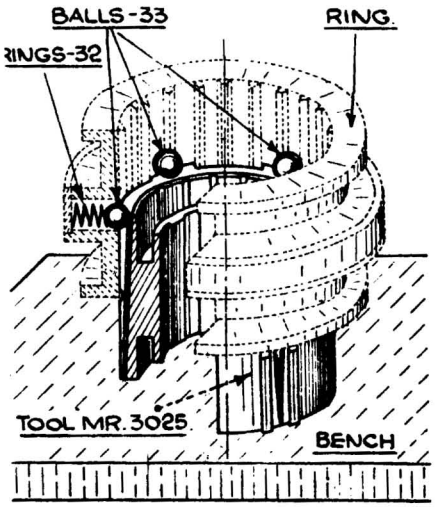

PLACE SYNCHROMESH RING ON TOOL. PLACE 6 SPRINGS IN THEIR HOUSINGS. PLACE 6 BALLS IN GROOVES. PUSH SYNCHROMESH RING DOWN ON TOOL.

— Fig.2. —

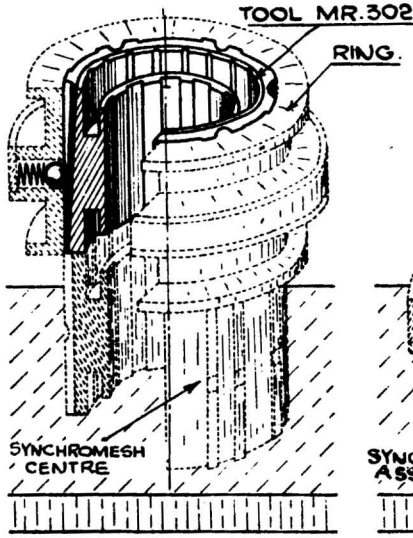

PLACE ASSEMBLY OF SYNCHROMESH RING ON TOOL. PUSH DOWN THE SYNCHROMESH RING TO RETURN THE BALLS.

— Fig.3. —

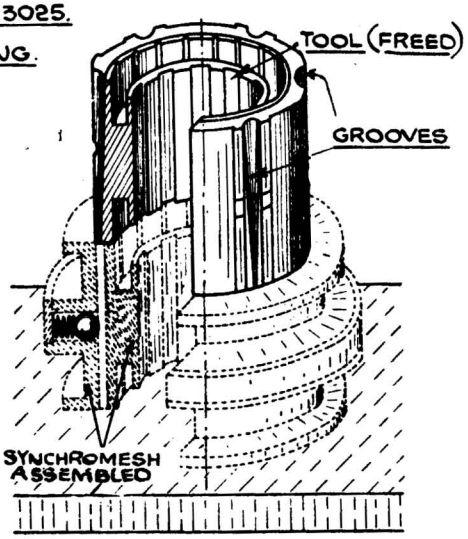

CONTINUE TO PUSH DOWN RING TO FREE TOOL.

— Fig.4. —

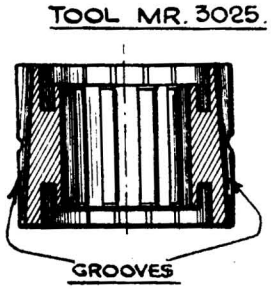

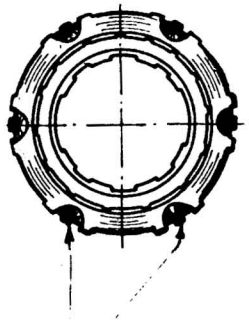

Each groove to be cut out from the middle spline of a group of 3 splines.

—GEARBOX—

—ASSEMBLING GEARBOX—

1. VARIOUS MANDRELS.

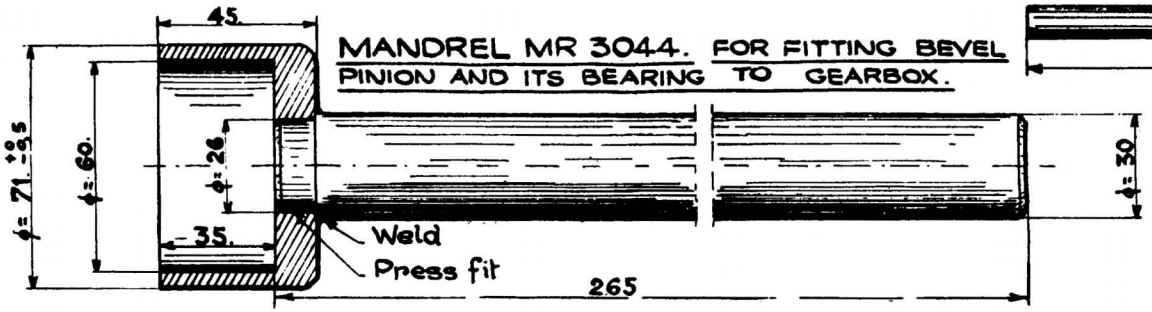

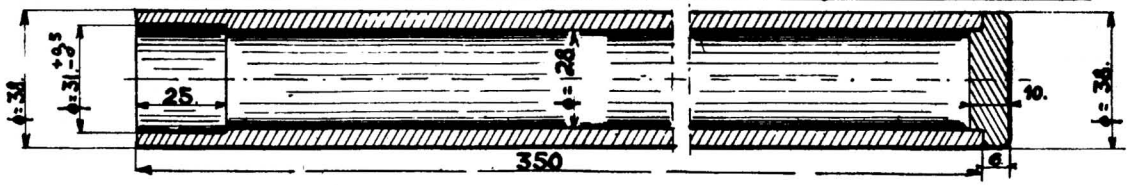

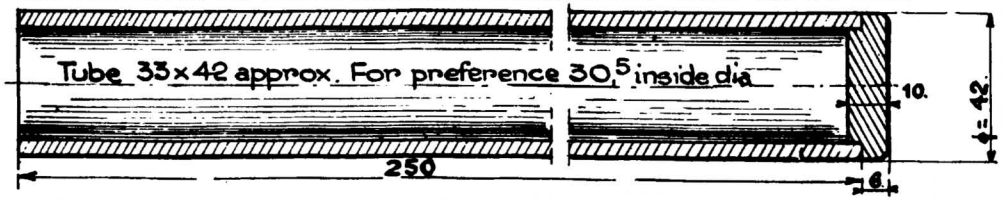

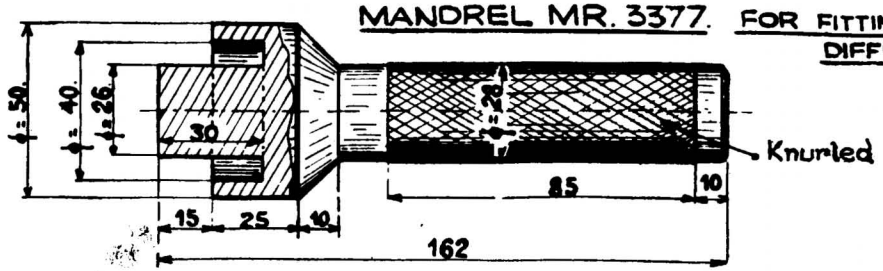

2. SPANNERS.

FOR CLUTCH BELLHOUSING BOLTS.

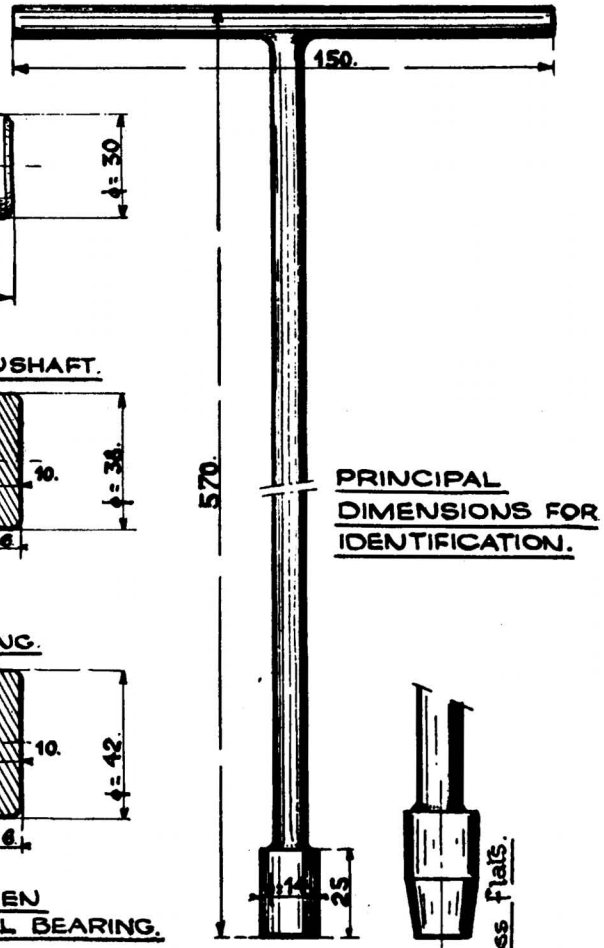

SPANNER 1676T. SPANNER 1675T.

— GEARBOX —

— RECTIFICATION OF SATELLITE THRUST FACES —

Fig. 1. USE OF TOOL.

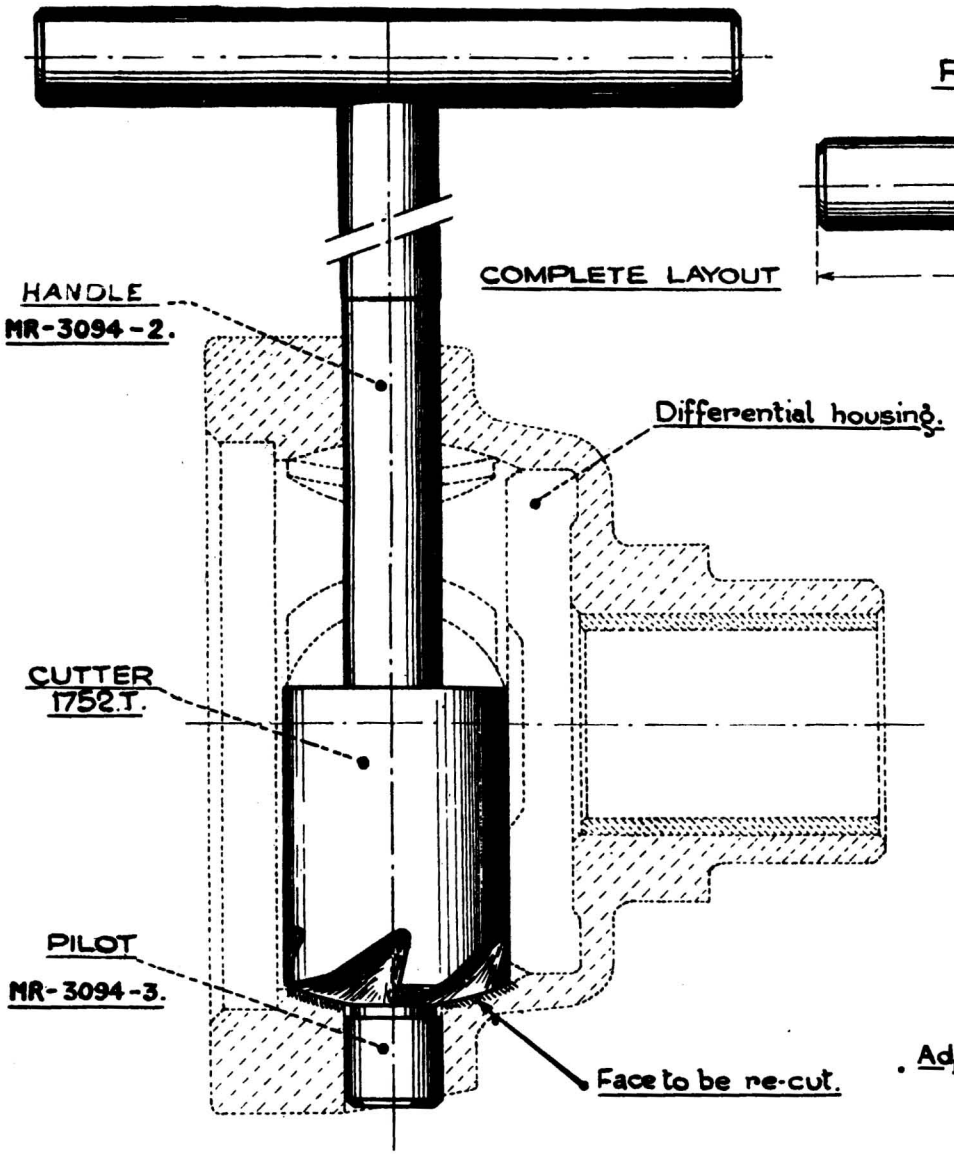

Fig. 2. HANDLE MR.3094-2

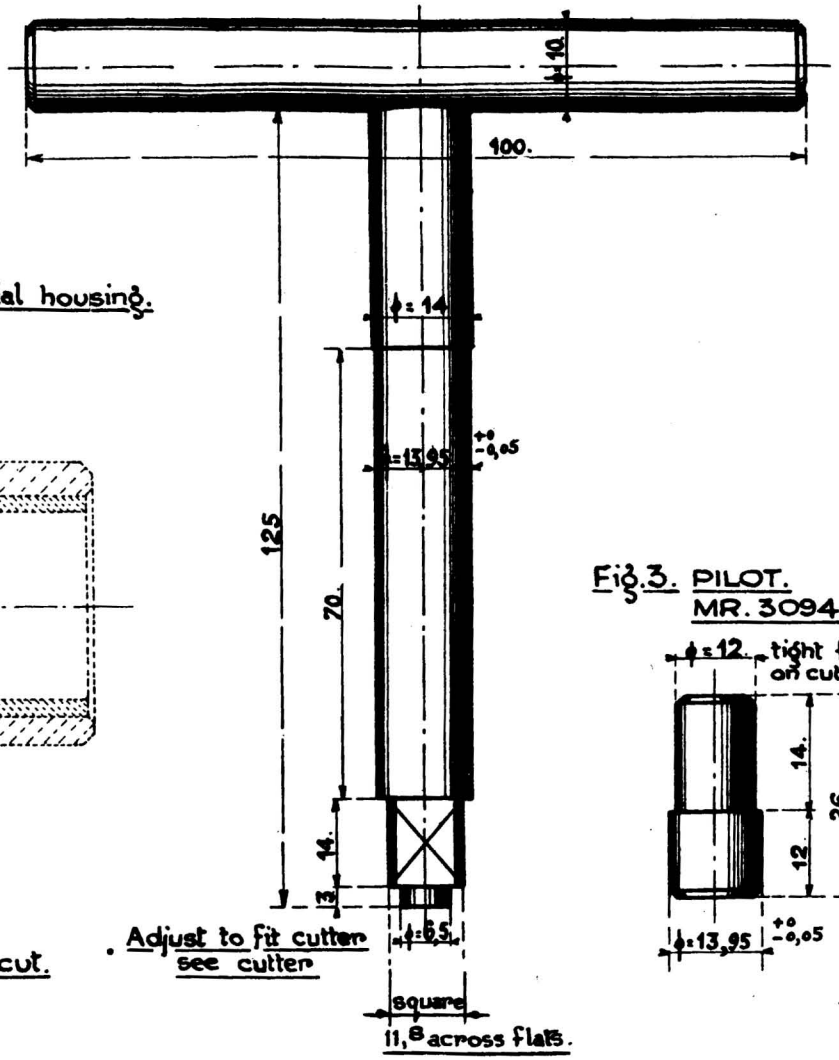

Fig. 3. PILOT.
MR. 3094-3

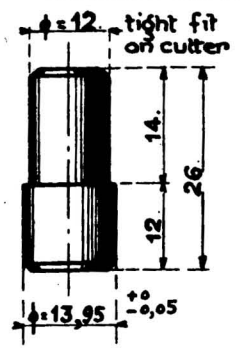

— STOP TOOL FOR TIGHTENING LAYSHAFT FRONT BEARING LOCKNUT —

LAYOUT SHOWING TOOL IN POSITION.

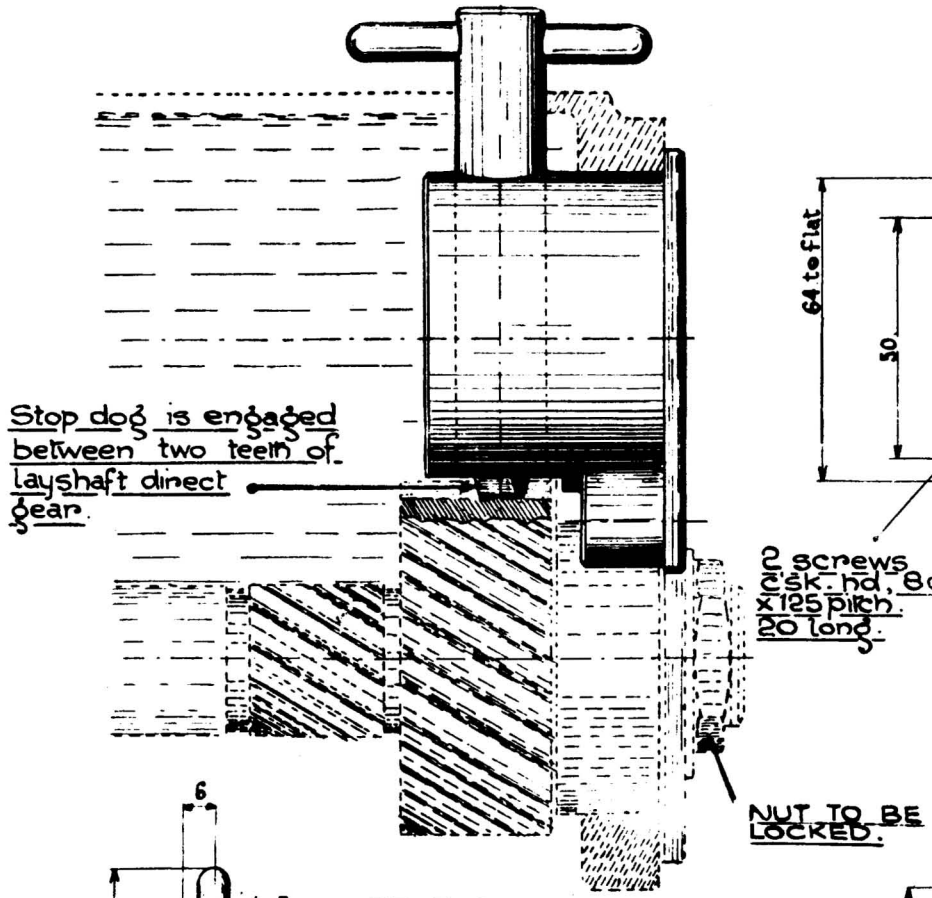

TOOL Nº MR. 3139.

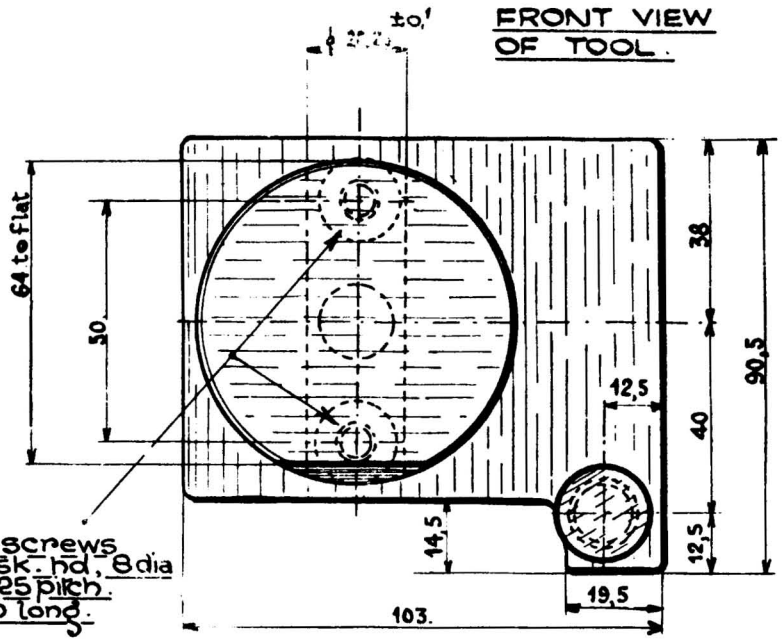

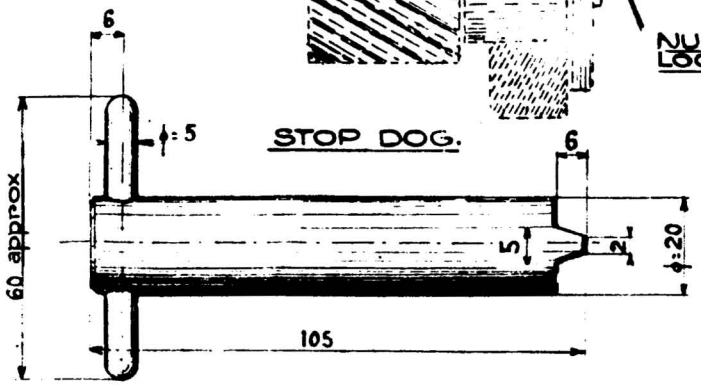

PLAN VIEW.

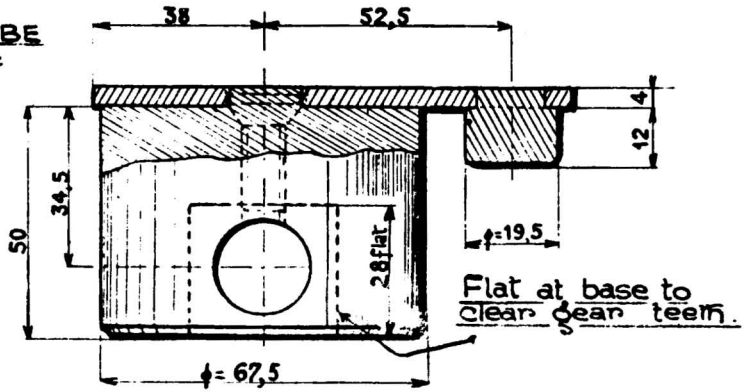

— GEARBOX —

— ADJUSTMENT OF CROWN WHEEL AND BEVEL PINION —

Fig. 1. USE OF APPARATUS FOR POSITIONING BEVEL PINION.

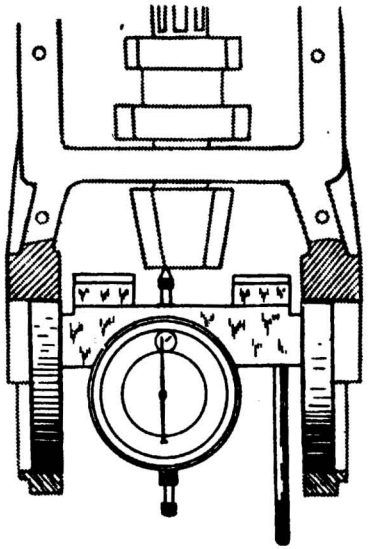

APPARATUS 2044.T.

Fig. 2. USE OF CLOCK GAUGE FOR ADJUSTING MESHING CLEARANCE.

BRACKET FOR CLOCK GAUGE. 2041T.

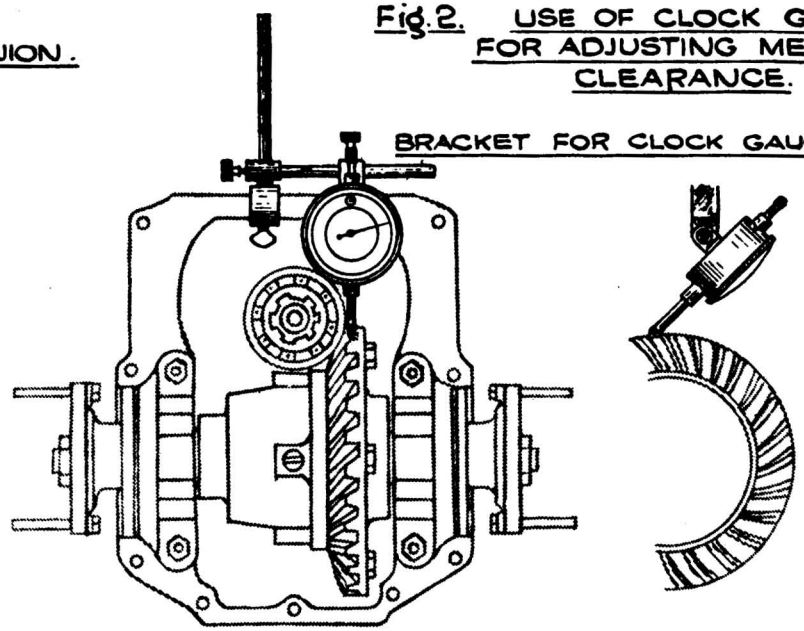

BEVEL PINION

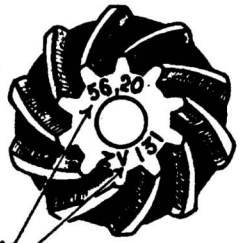

PINION SETTING DIMENSION

MATCHING NUMBER

CROWN WHEEL

MATCHING NUMBER

MESHING CLEARANCE IN HUNDREDTHS OF M/M.

— ADJUSTMENT OF CROWN WHEEL AND BEVEL PINION —

(SIMPLIFIED METHOD)

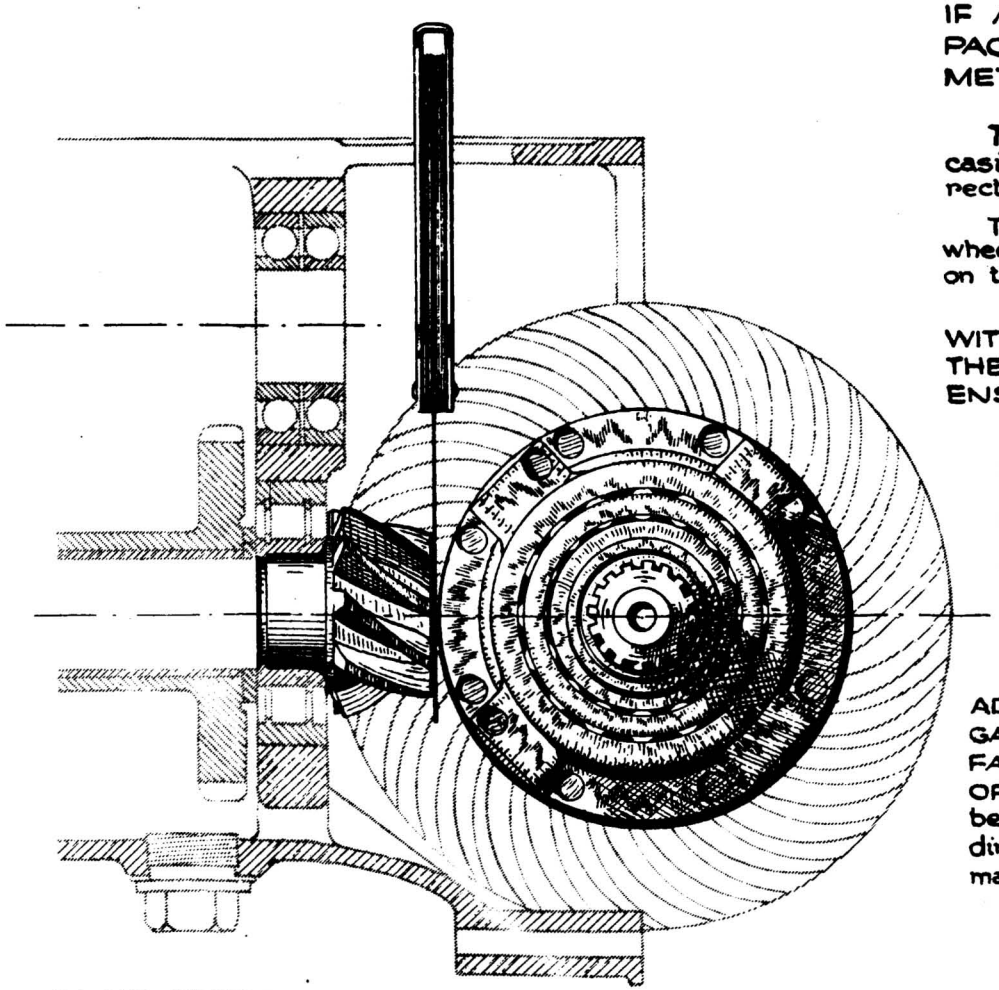

IN NO CIRCUMSTANCES IS ANY OTHER MEANS OF ADJUSTING CROWN WHEELS AND BEVEL PINIONS TO BE EMPLOYED.

IF APPARATUS 2040.T. SHOWN ON PAGE 35 IS NOT AVAILABLE USE THE METHOD AS DESCRIBED BELOW:

The outer circumference of the differential casing which locates the crown wheel is rectified to 110 m.m. diameter.

The distance from the centre of the crown wheel to the face of the bevel pinion is etched on the pinion face (see Page 35)

WITH BEVEL PINION FITTED IN PLACE, FIT THE DIFFERENTIAL, TIGHTEN BEARINGS TO ENSURE THAT THERE IS NO SIDE PLAY.

TO ADJUST BEVEL PINION, FIND THE DIFFERENCE BETWEEN PINION FACE AND OUTER CIRCUMFERENCE OF DIFFERENTIAL CASING.

EXAMPLE:

DIMENSION ETCHED ON PINION = 56,20mm
RADIUS OF DIFFERENTIAL CASING = 55 mm
DIFFERENCE = 56,20 − 55 = 1,20mm

ADJUST THE PINION SO AS TO OBTAIN A GAP OF 1.20m.m. BETWEEN FRONT MACHINED FACE OF PINION AND RECTIFIED FACE OF DIFFERENTIAL CASING. (Care must be taken not to measure the pinion dimension from the pinion shaft cap which may stand proud of the pinion face)

MEASURE THIS DISTANCE WITH AN ORDINARY COMMERCIAL FEELER GAUGE (See illustration)

— GEARBOX —

— ADJUSTMENT OF DIFFERENTIAL BEARINGS —

USE OF SPANNER

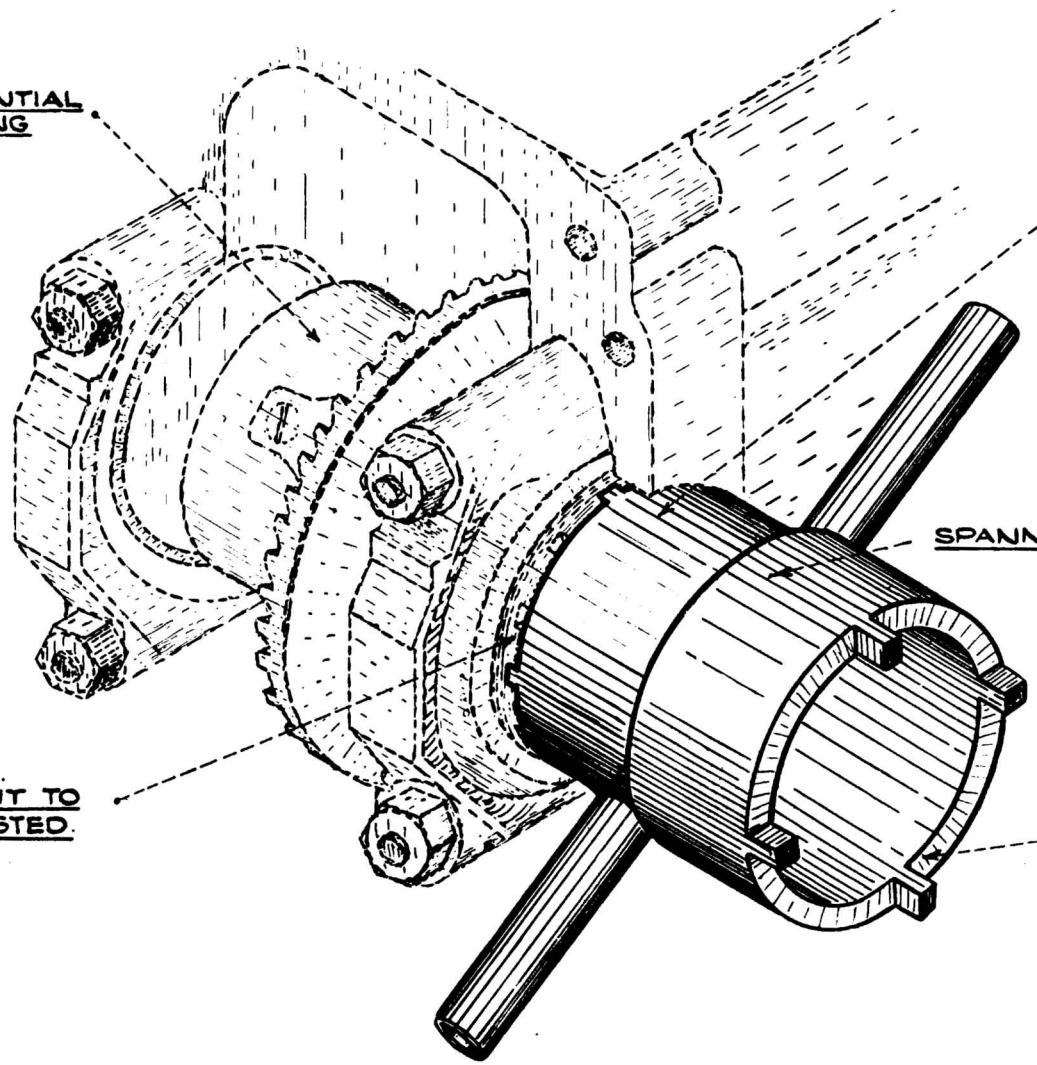

FRONT AXLE

EXTRACTION OF BALL PINS

Fig. 1. BALL PIN EXTRACTOR 1964.T.

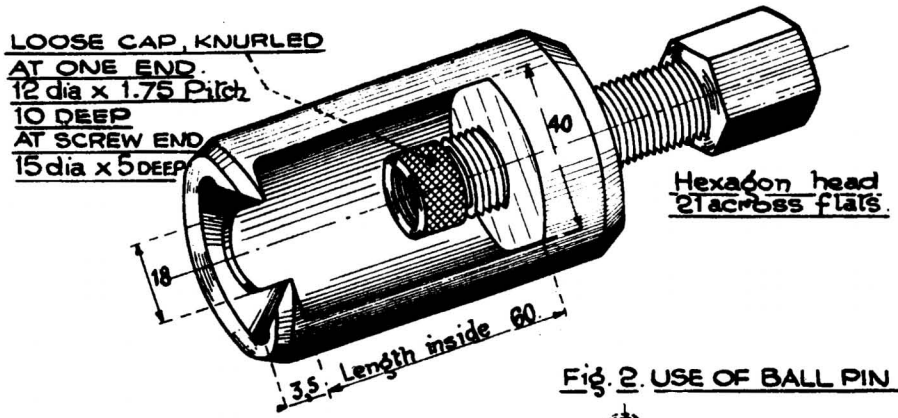

Fig. 2. USE OF BALL PIN EXTRACTOR.

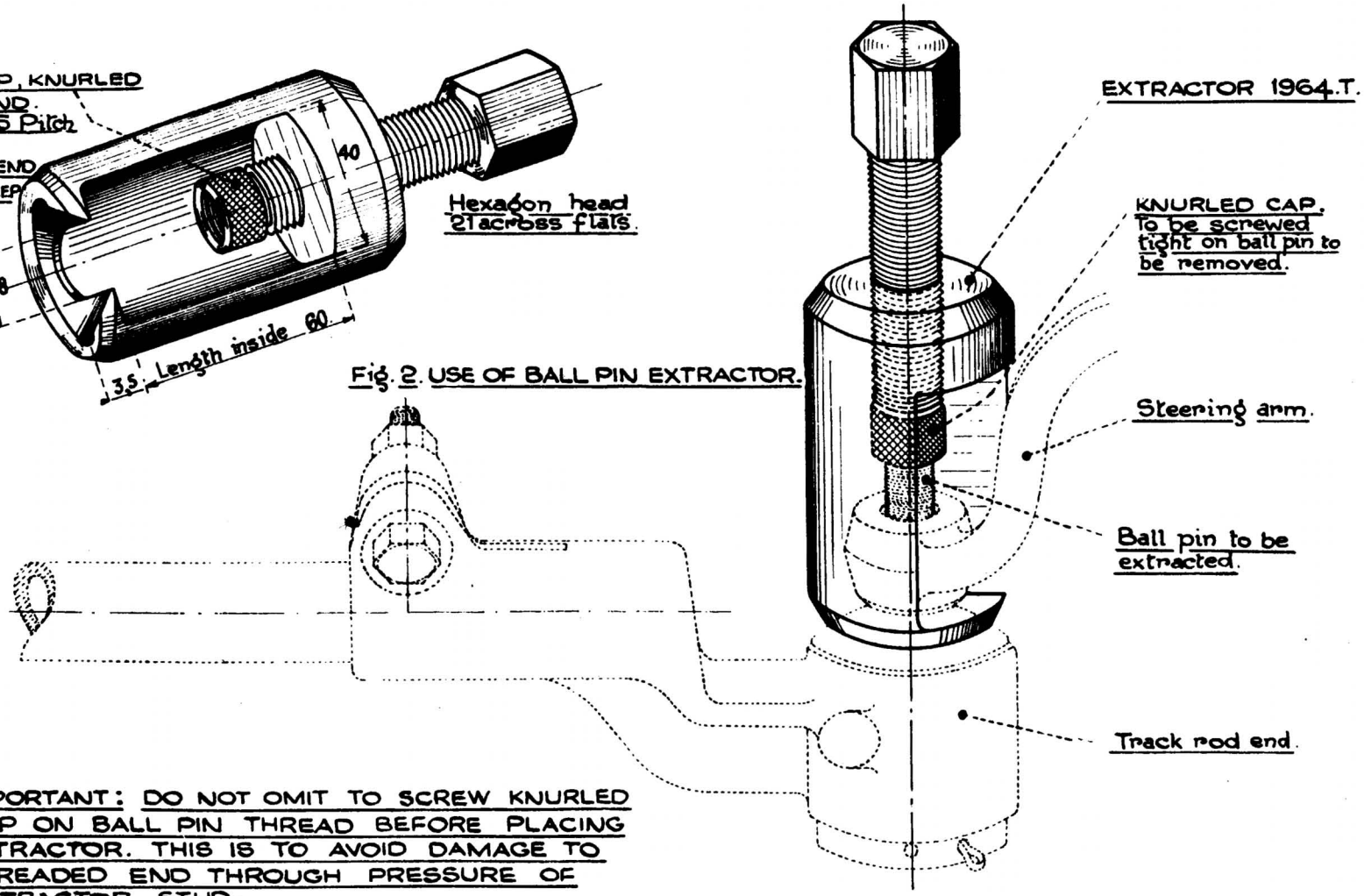

IMPORTANT: DO NOT OMIT TO SCREW KNURLED CAP ON BALL PIN THREAD BEFORE PLACING EXTRACTOR. THIS IS TO AVOID DAMAGE TO THREADED END THROUGH PRESSURE OF EXTRACTOR STUD.

— FRONT AXLE —

— ASSEMBLY OF SILENTBLOC & TORSION BAR —

HORIZONTAL SECTION ON CENTRE - LINE

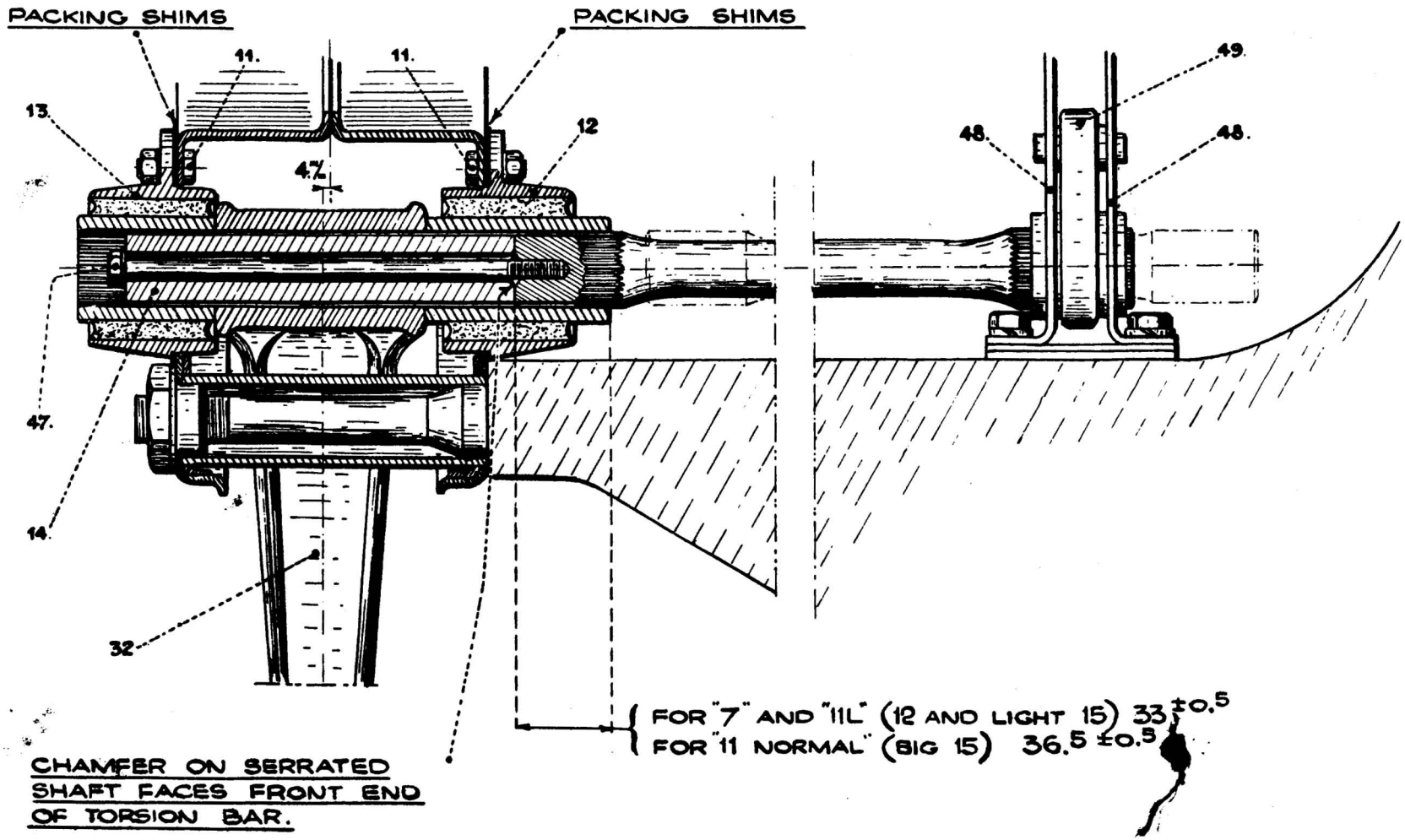

— FRONT AXLE —

— MOUNTING LOWER ARM —

Fig. 1. SPANNER. (1880.T)

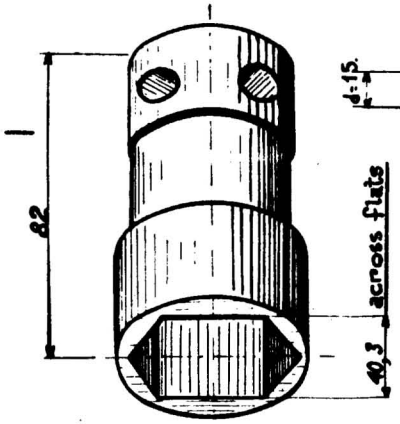

— Fig. 1. —

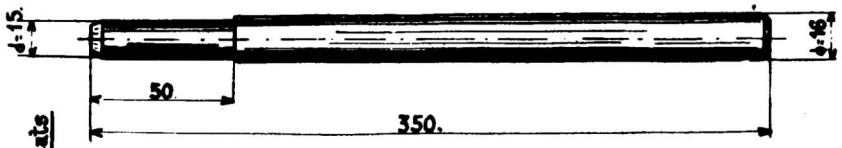

TOMMY BAR FOR BOX SPANNER MR. 3197-2.

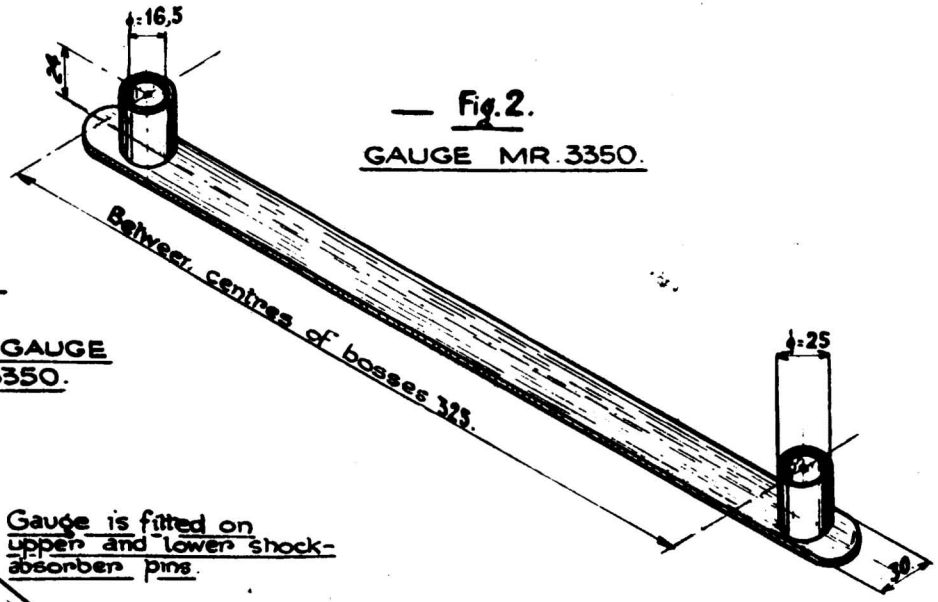

— Fig. 2.

GAUGE MR. 3350.

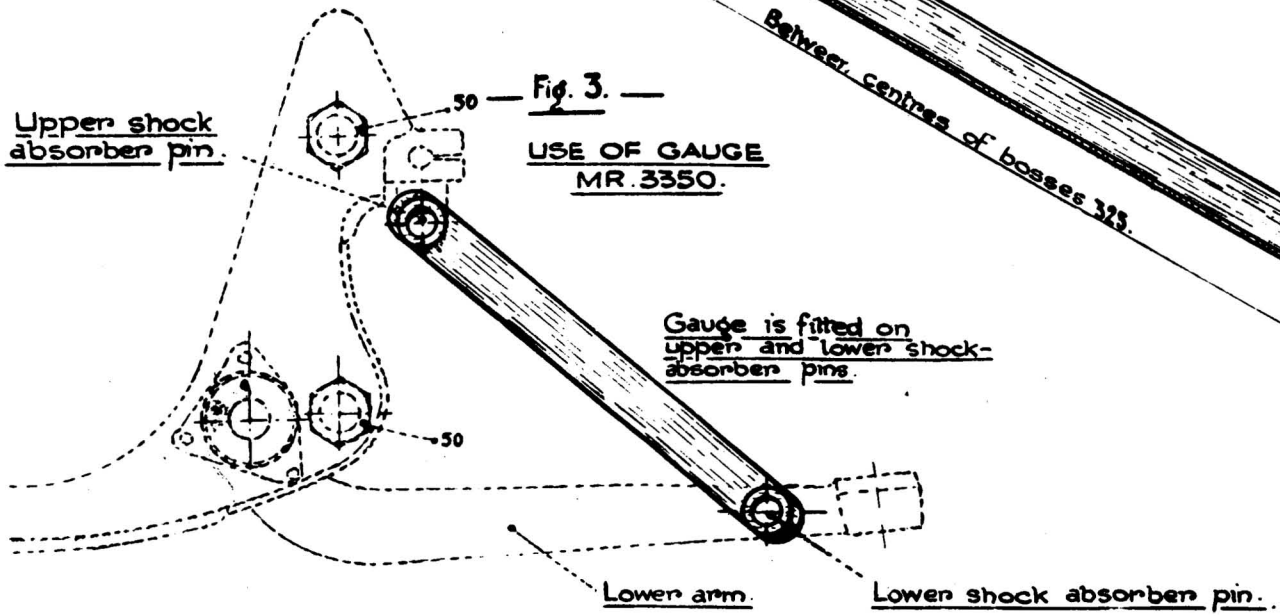

— Fig. 3. —

USE OF GAUGE MR. 3350.

— FRONT AXLE —

— FITTING OF TORSION BARS —

ASSEMBLY SHOWING TORSION BAR BEING FITTED

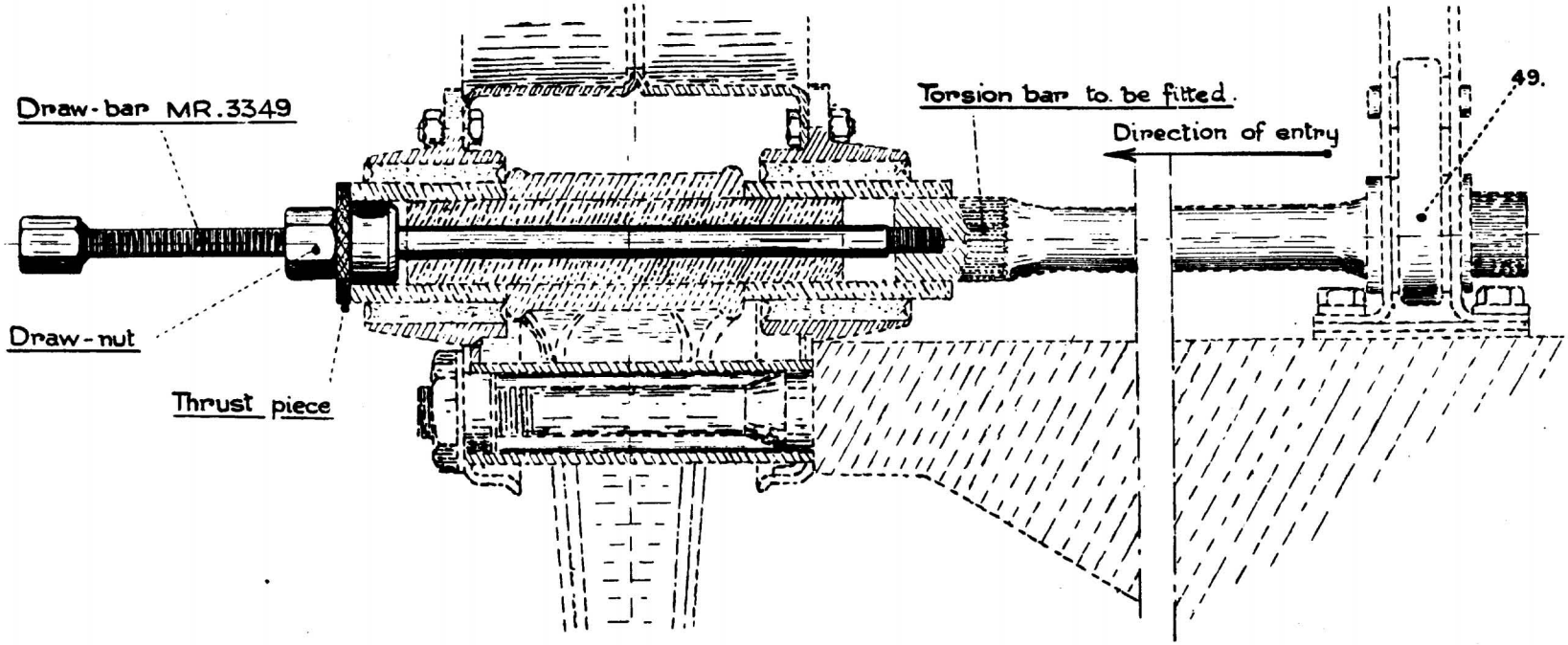

DRAW-BAR MR.3349.

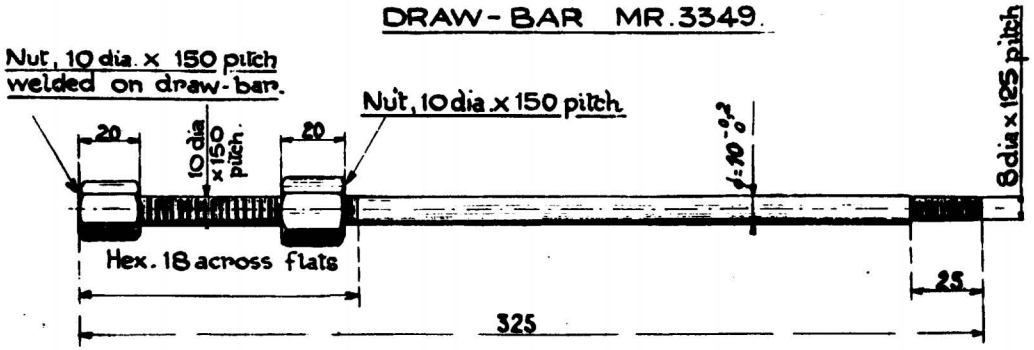

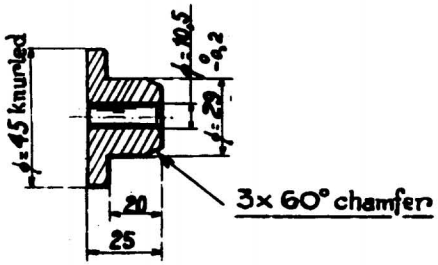

DETAILS OF THRUST PIECE.

— FRONT AXLE —

— VERTICAL SECTION THROUGH HUB & SWIVEL CENTRE - LINE —

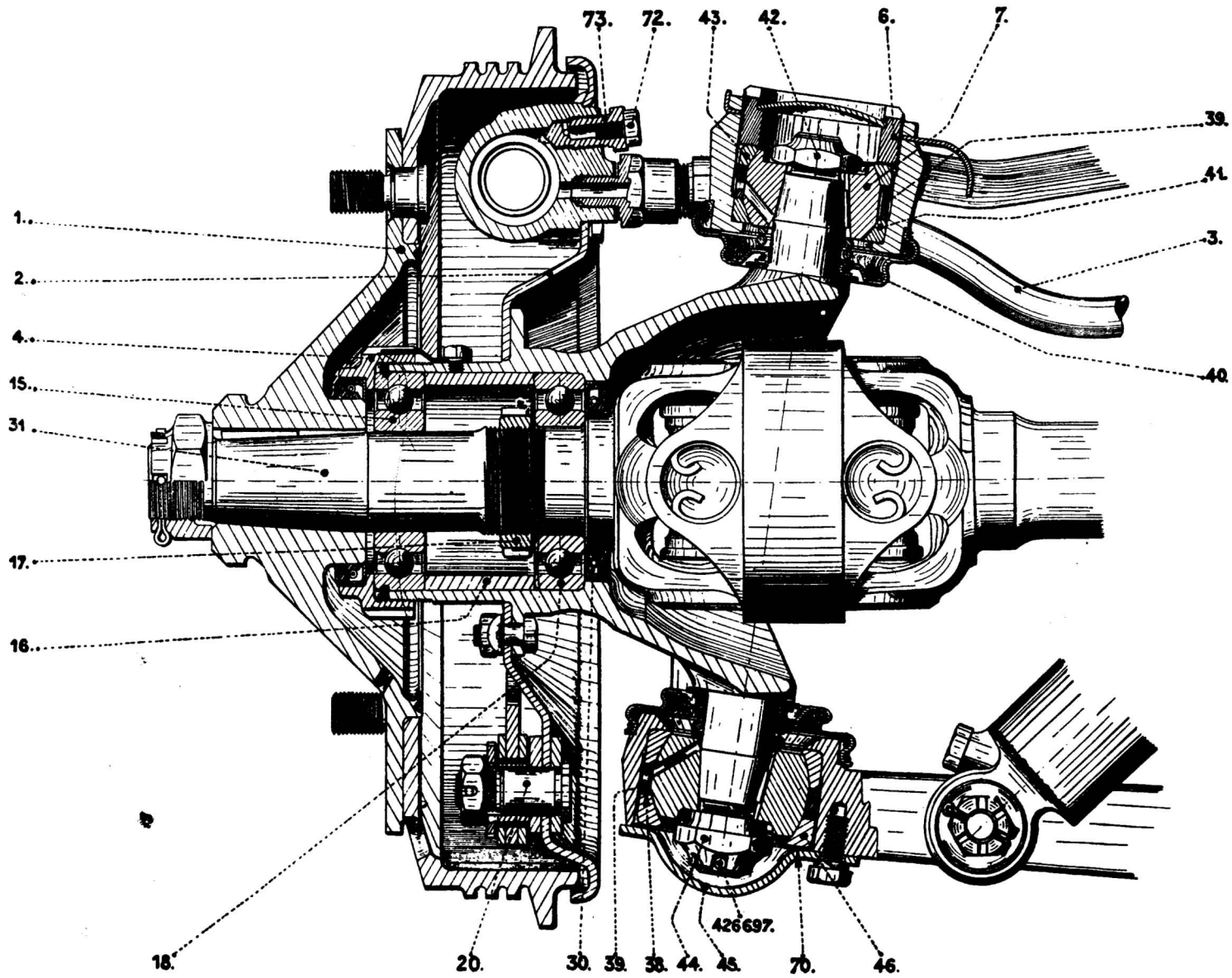

— FRONT AXLE —

— DISMANTLING HUBS AND BALL-RACES —

Fig. 1. EXTRACTING HUB.

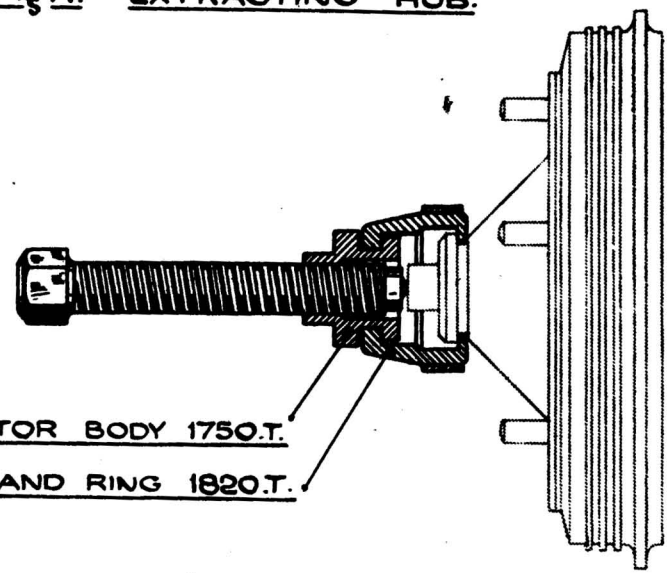

Fig. 2. EXTRACTING BALL-RACE

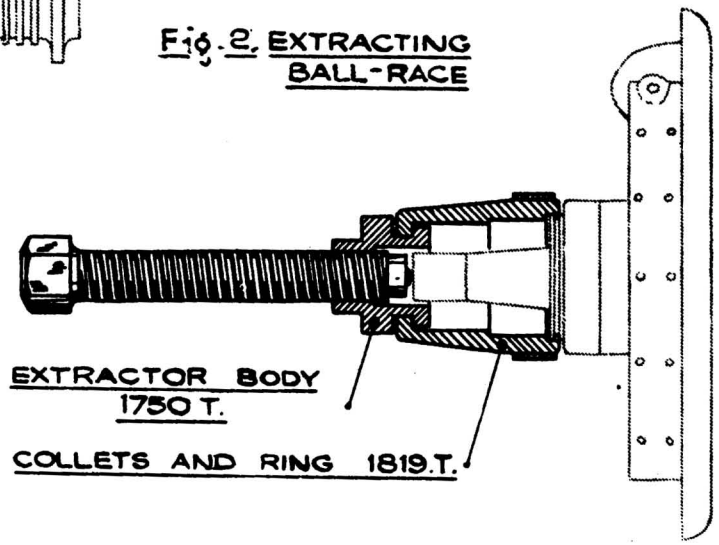

Fig. 3. SPANNER. (1810.T)

THIS SPANNER IS USED WITH TORSION WRENCH 2472.T.

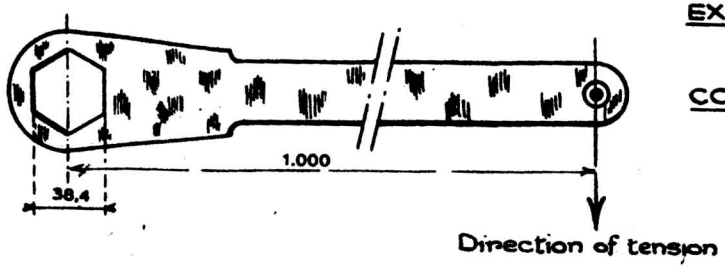

TENSION SHOULD BE APPLIED PERPENDICULARLY TO LENGTH OF SPANNER AS SHOWN.

— DISMANTLING STEERING ARM & OUTER BALL-RACE RETAINING RING —

Fig.1. – REMOVING STEERING ARM

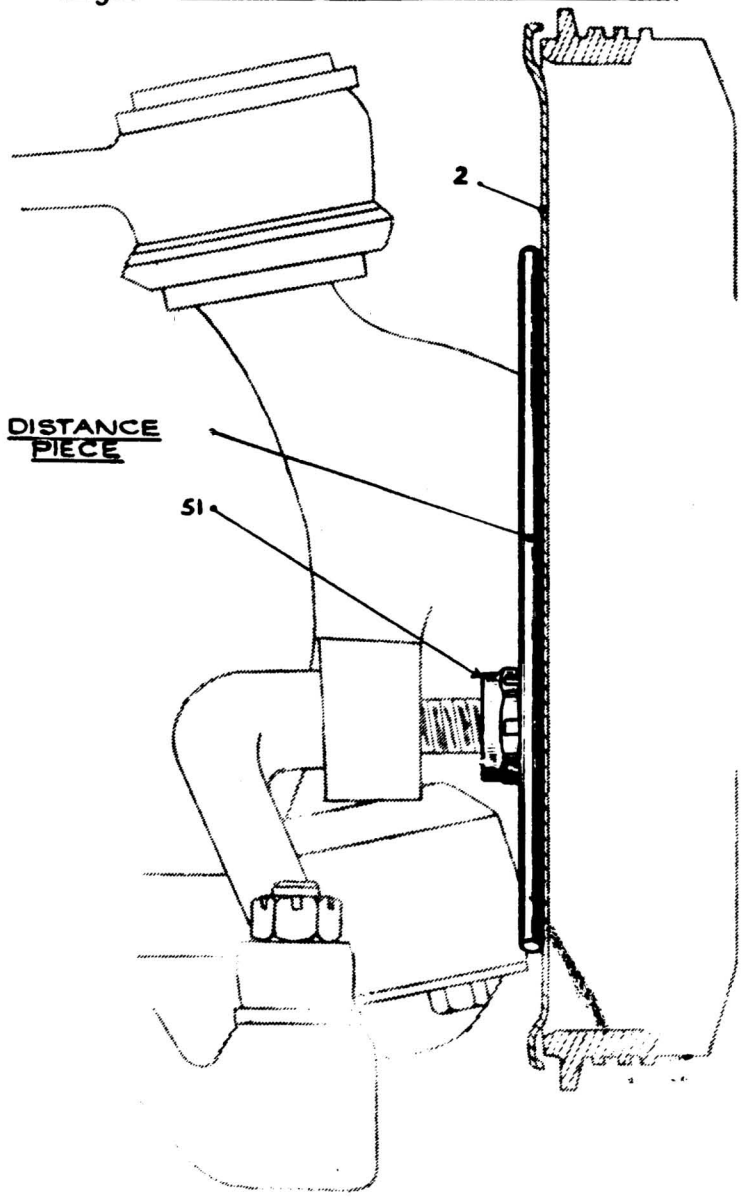

Fig. 2 – USE OF SPANNER.

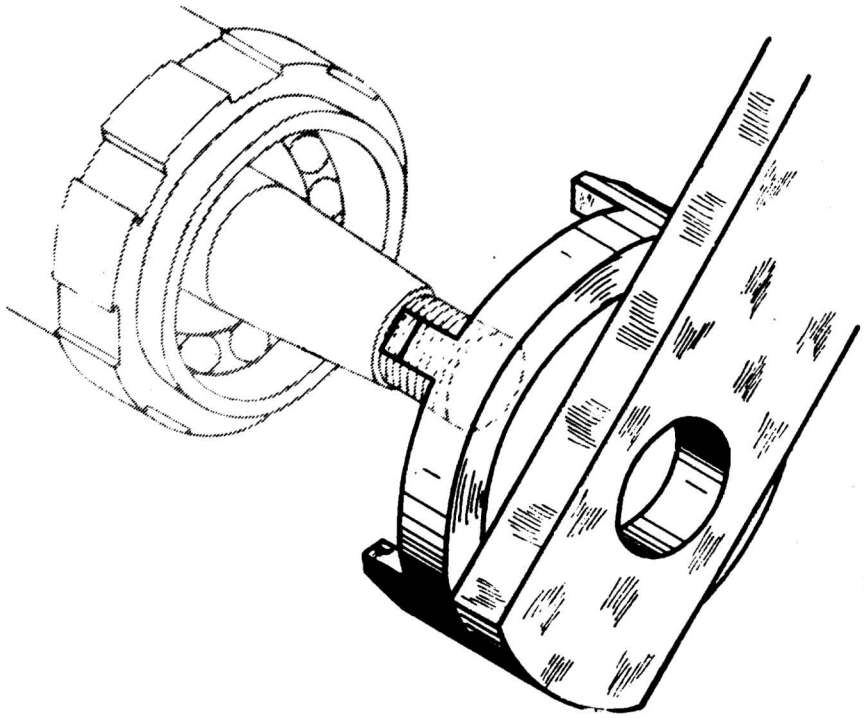

Fig. 3. – SPANNER 1825.T.

— FRONT AXLE —

— DISMANTLING UPPER & LOWER SWIVEL BALLS —

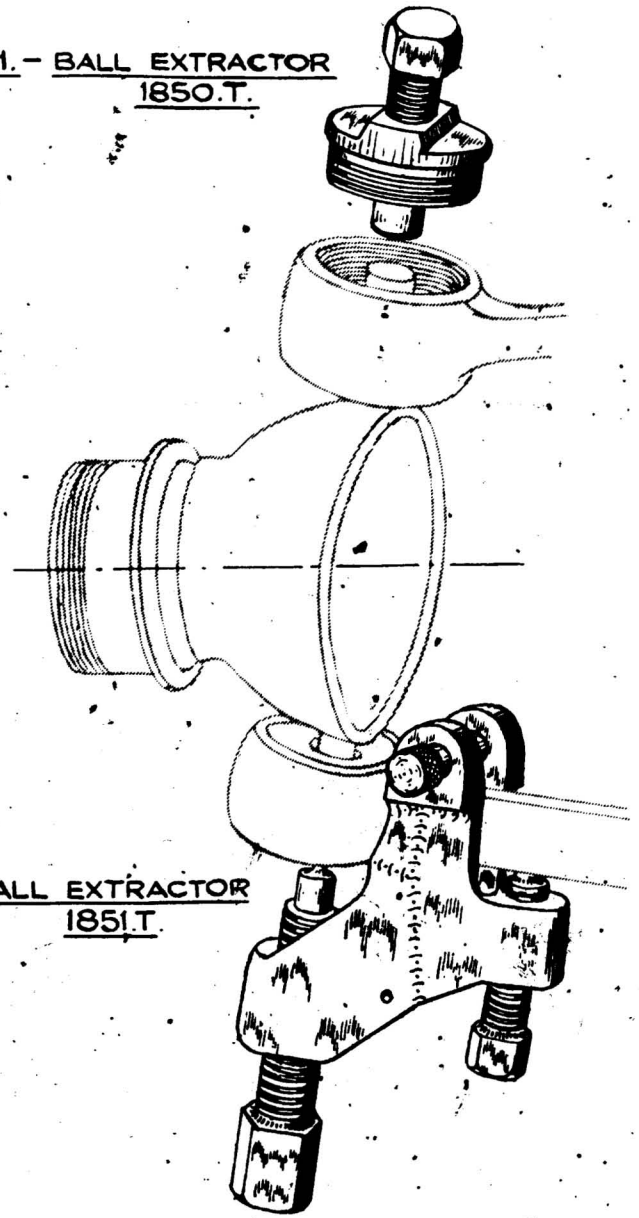

Fig. 1. – BALL EXTRACTOR 1850.T.

Fig. 2. BALL EXTRACTOR 1851.T.

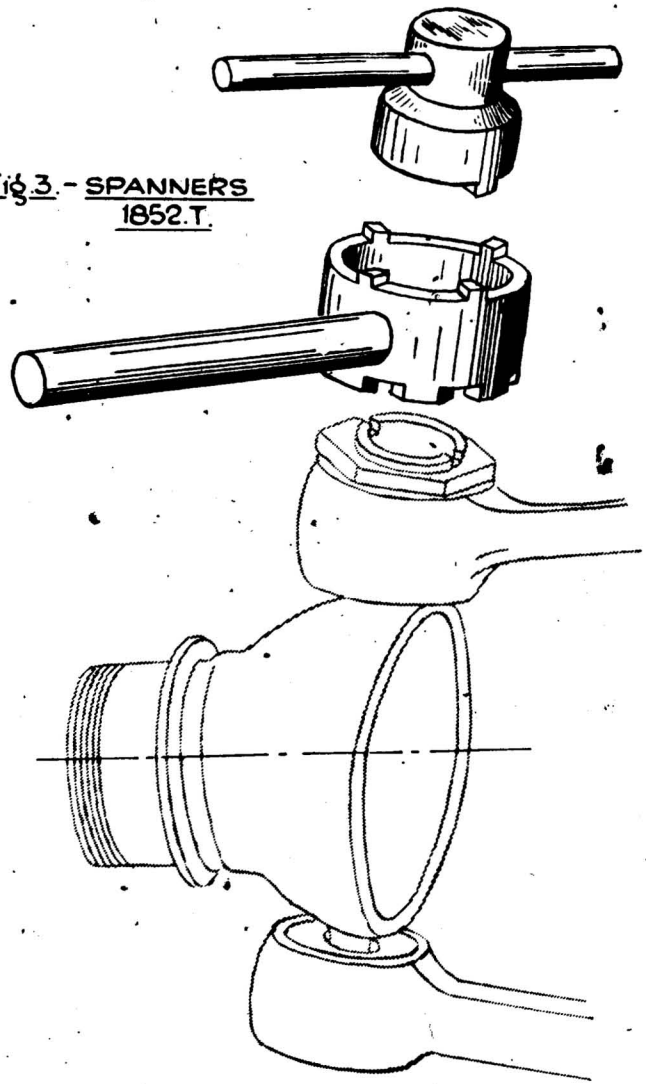

Fig. 3. – SPANNERS 1852.T.

— FRONT AXLE —

— SECTION ON CENTRE-LINE OF UPPER LINK —

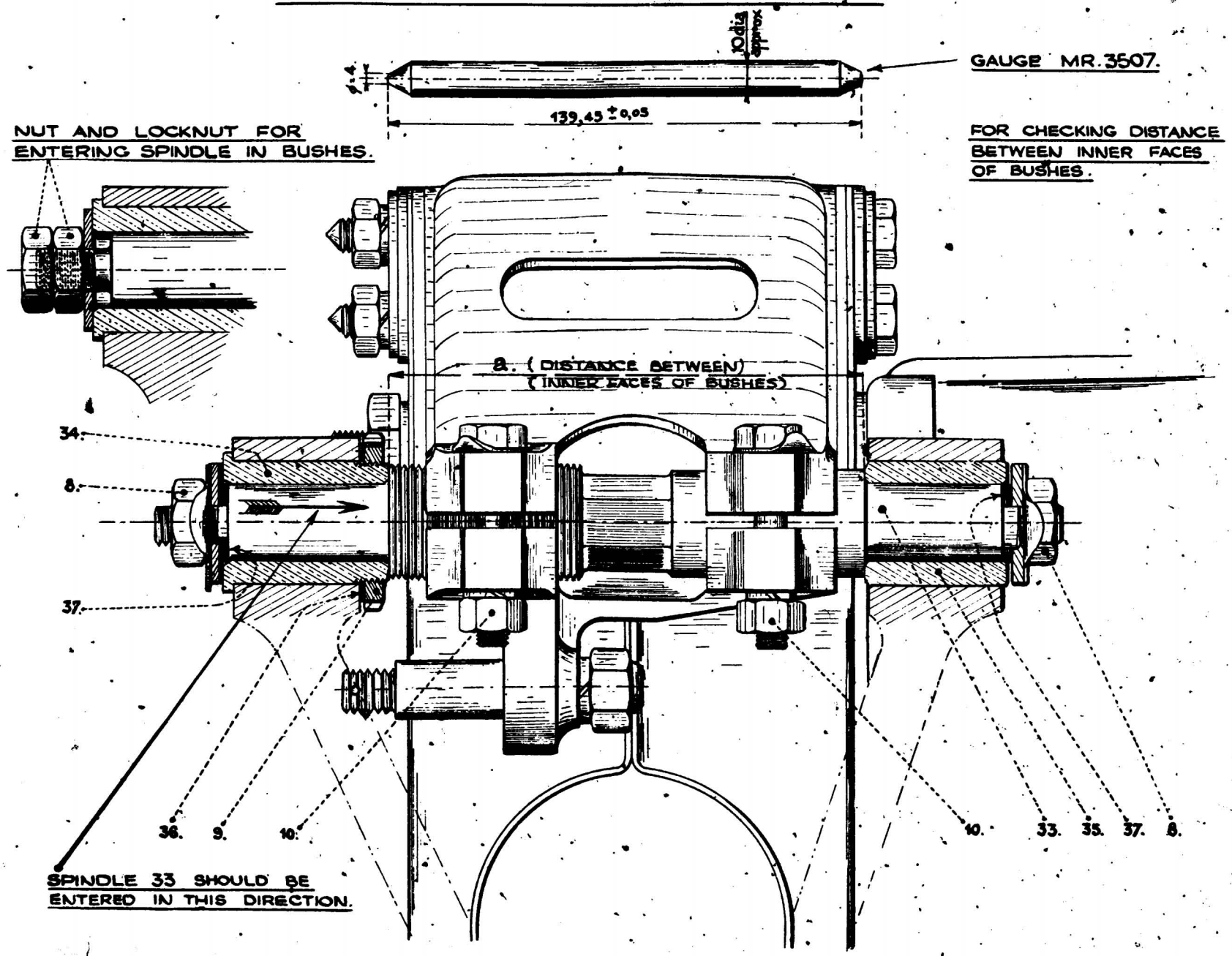

— DISMANTLING & ASSEMBLING SERRATED SHAFT —

ASSEMBLY SHOWING EXTRACTION OF SERRATED SHAFT.

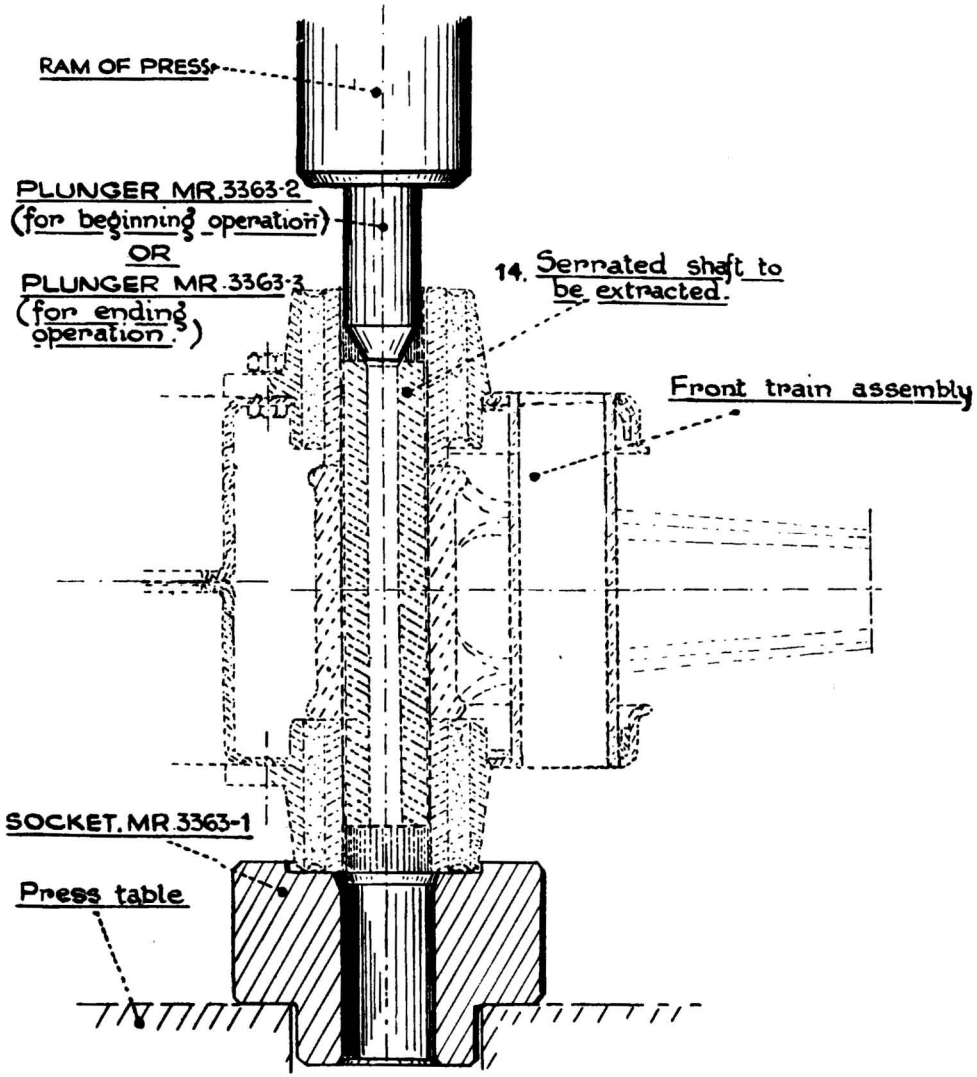

LONG PLUNGER MR. 3363-3

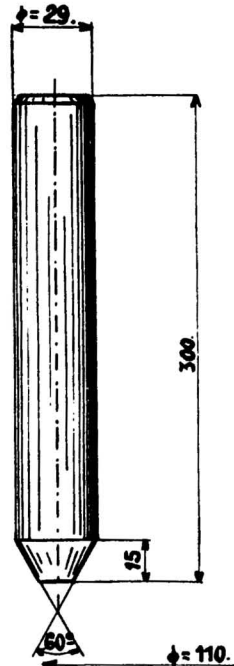

SHORT PLUNGER. MR. 3363-2

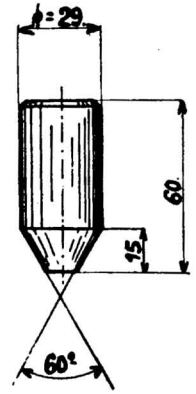

SOCKET. MR.3363-1

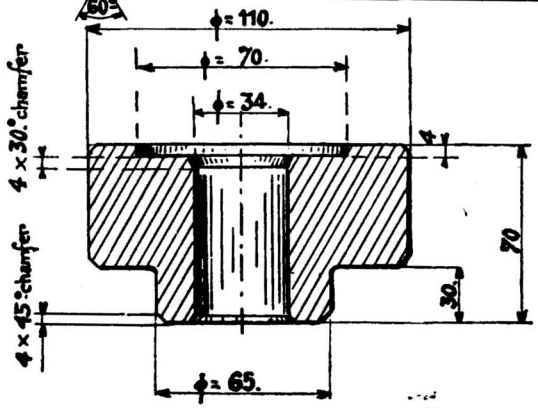

— FRONT AXLE —

— DISMANTLING & ASSEMBLING NUT FOR STUB AXLE INNER BALL-RACE —

USE OF SPANNER

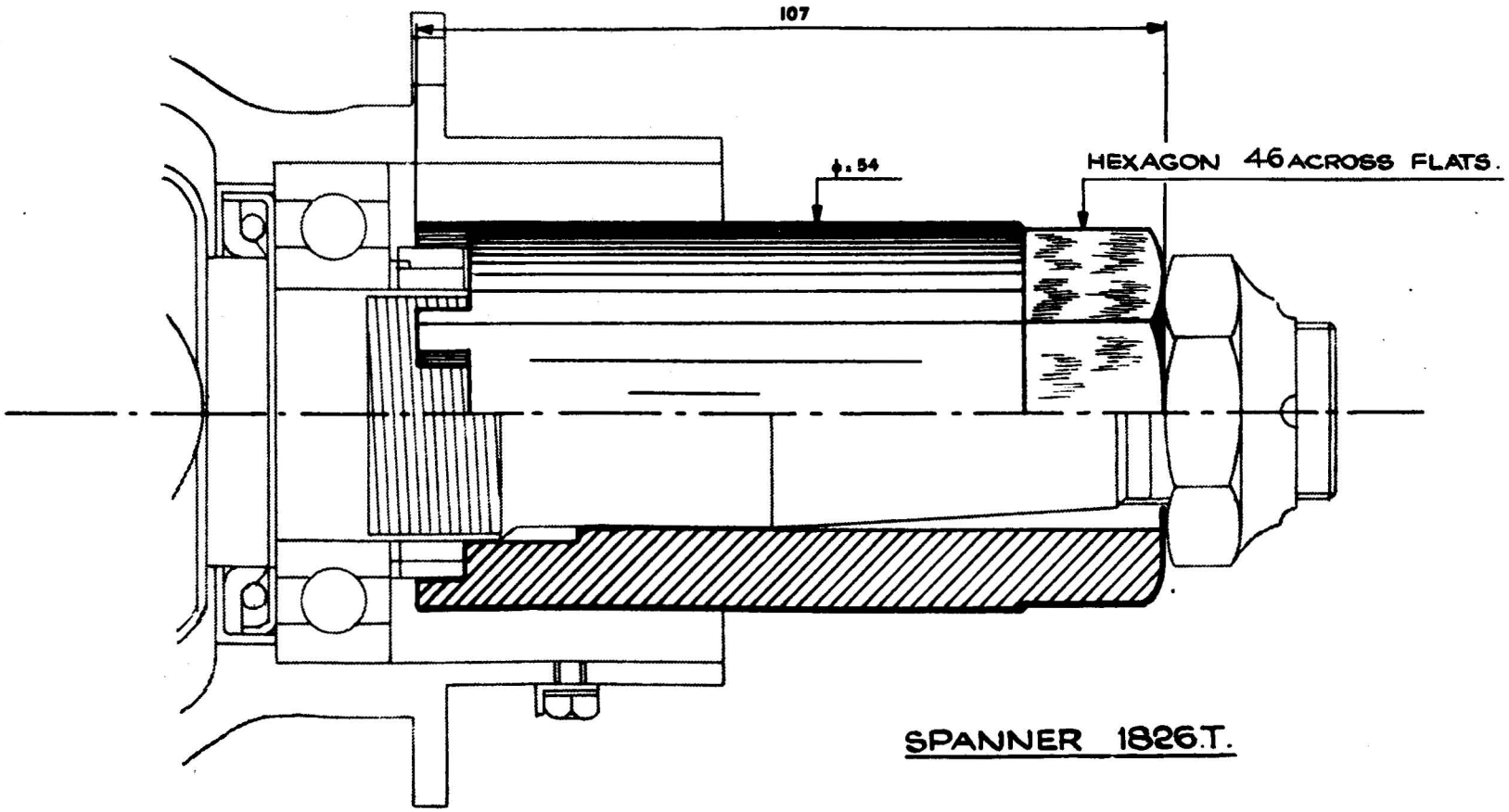

SPANNER 1826.T.

— FRONT AXLE —

— FITTING DRIVE SHAFTS —

Fig. 1.- USE OF APPARATUS.

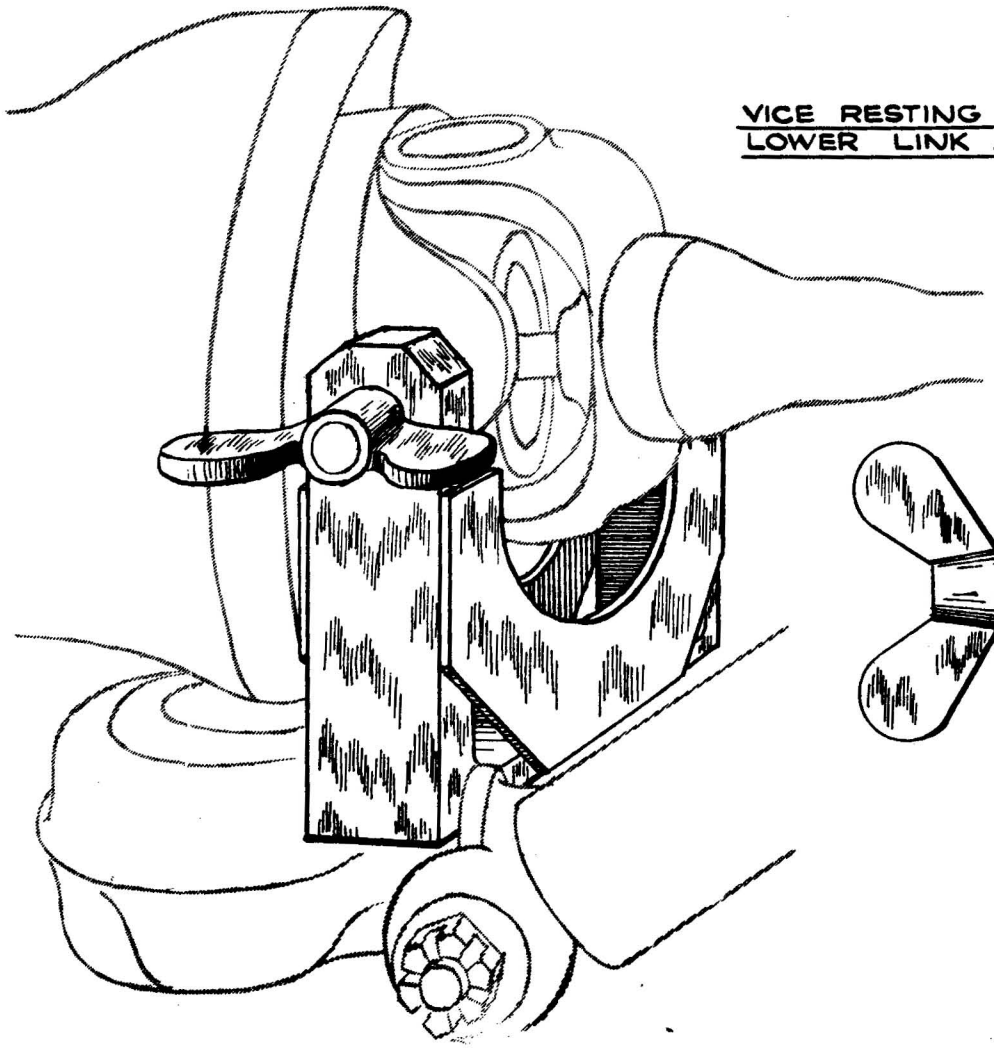

Fig. 2.- VICE 1830.T.

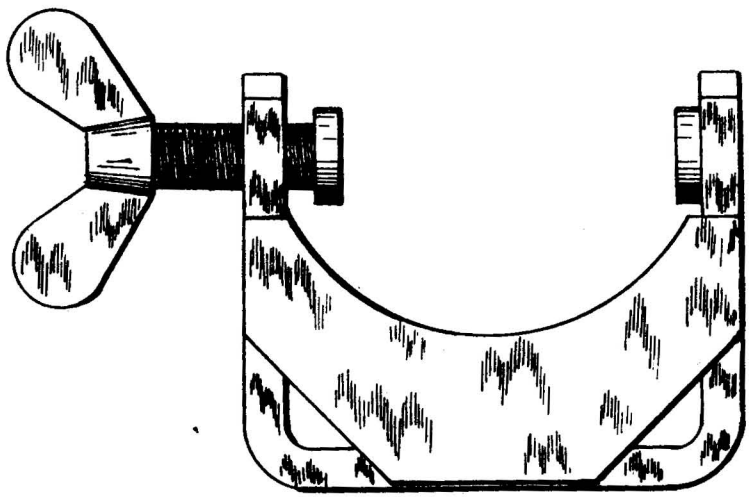

— REMOVING STUB AXLE AND INNER BALL-RACE —

TOOL FOR REMOVING STUB AXLE.
1824.T.

— Fig. 1. —

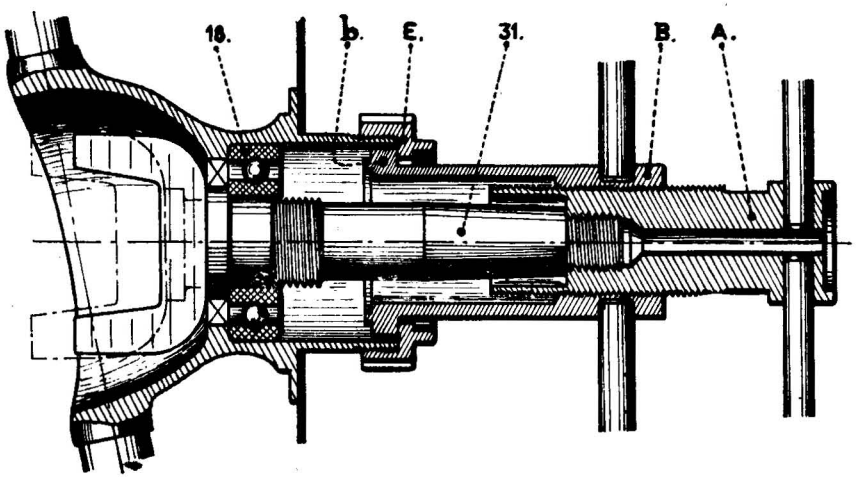

REMOVING STUB AXLE

- SCREW A DOWN (RIGHT HAND OR LEFT HAND ACCORDING TO SIDE) TIGHTLY ON TO STUB AXLE END : 31.
- TURN B TO RIGHT ROUND A. (b FITS INTO SWIVEL)
- SCREW E ON SWIVEL.
- TURN B TO LEFT (KEEPING HANDLE A STEADY TO PREVENT IT FROM TURNING) A PUSHES STUB AXLE 31 WHICH COMES OUT OF BALLRACE : 18.
- TO FREE TOOL.
  UNSCREW E FROM SWIVEL.
  UNSCREW A FROM STUB AXLE.

— Fig. 2. —

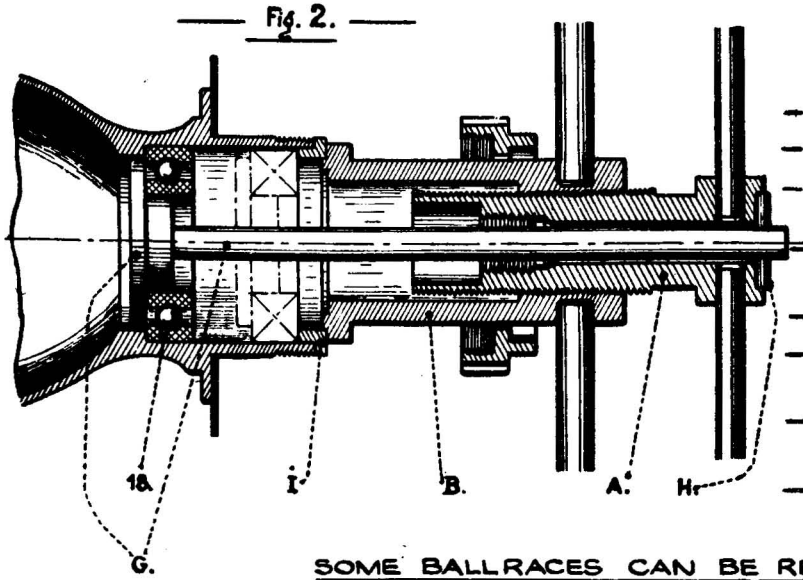

REMOVING INNER BALLRACE

- PLACE BEARING I ON SWIVEL.
- PUSH ASSEMBLY G THROUGH BALLRACE: 18
- FIT ASSEMBLY A AND B OVER SHAFT G UNTIL ASSEMBLY TOUCHES BEARING I.
- SCREW A RIGHT HAND INTO B TO CLEAR HOLE FOR STOP PIN H.
- PUT STOP PIN H IN POSITION.
- TURN B RIGHT HAND (KEEPING A STEADY) UNTIL BALLRACE 18 TOUCHES BEARING I.
- PULL COMPLETE ASSEMBLY WITH BALLRACE 18 AWAY.
- TO FREE TOOL.
  WITHDRAW SHAFT G.

SOME BALLRACES CAN BE REMOVED WITH EXTRUDING TOOL.

— FRONT AXLE —

EXTRACTOR FOR OUTER BALL RACE (OUTER GROOVE BROKEN) — EXTRACTOR FOR INNER BALL RACE —

— Fig 1. —

Use of instrument to extract outer ball race.

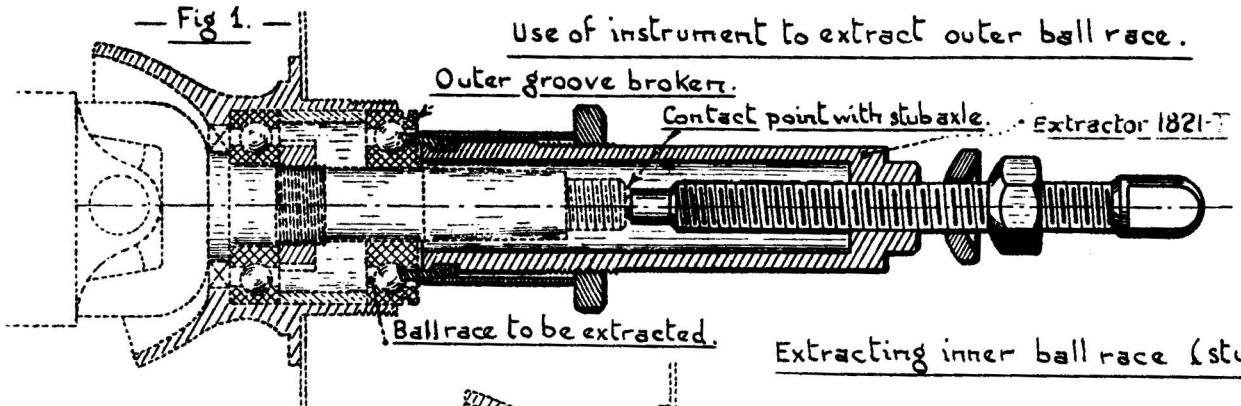

Extractor with collets for bearing with 10 balls 1821-T.

Extracting inner ball race (stub axle withdrawn.)

— Fig 2 —

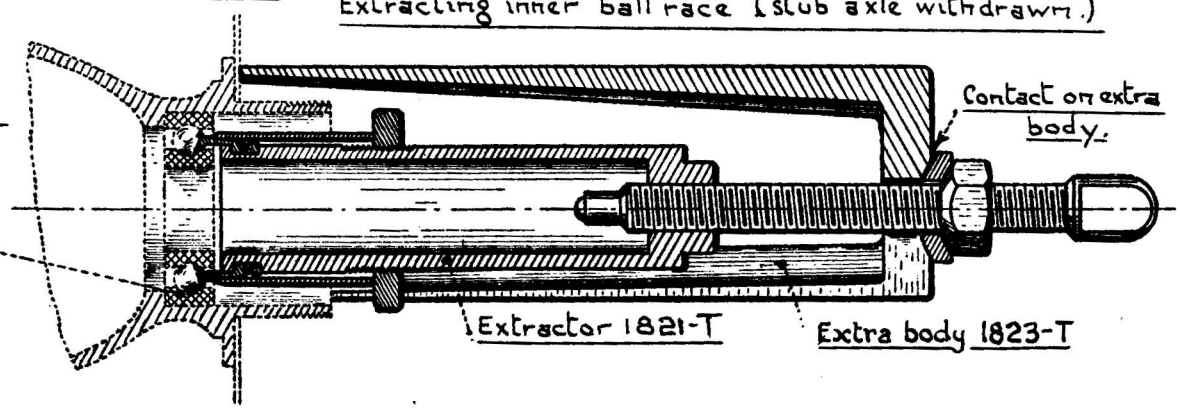

— Fig 3 —

Extracting inner ball race (stub axle in position.)

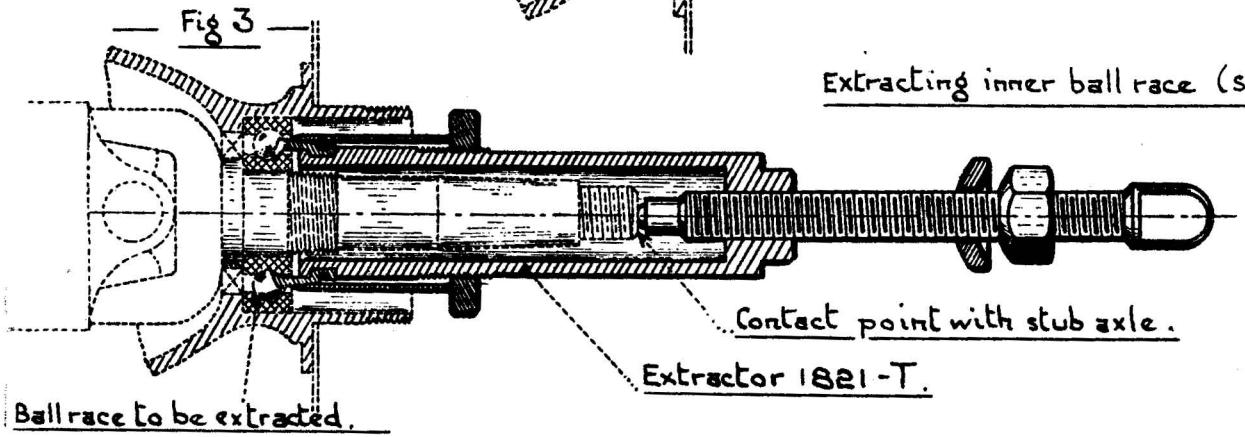

Collets for bearings with
10 balls - 1822-T
9 balls - 1828-T

— FRONT AXLE —

— BRAKE BACK PLATE ASSEMBLY

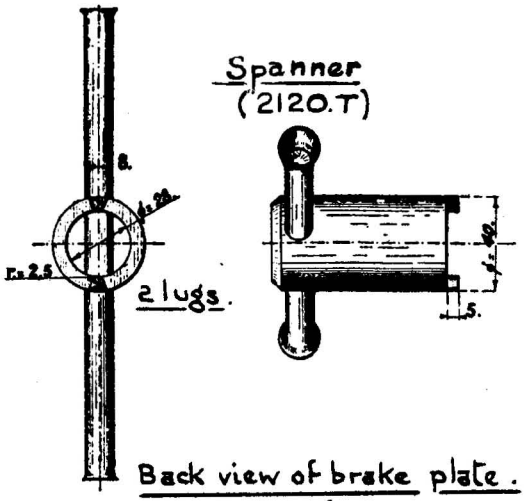

Spanner
(2120.T)

Back view of brake plate.

Front view with shoes removed.

— Fig. 1 —

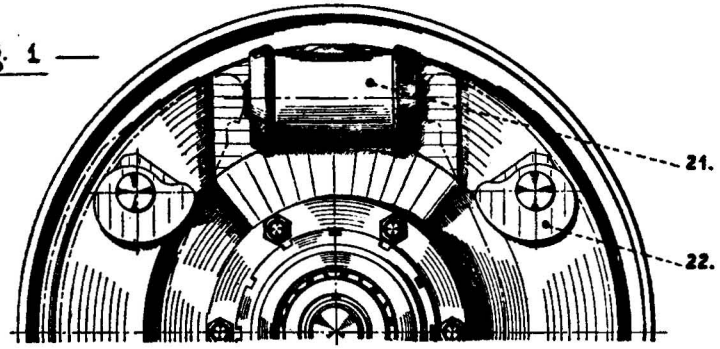

Brake plate assembled (with shoes)

— FIG. 3. —

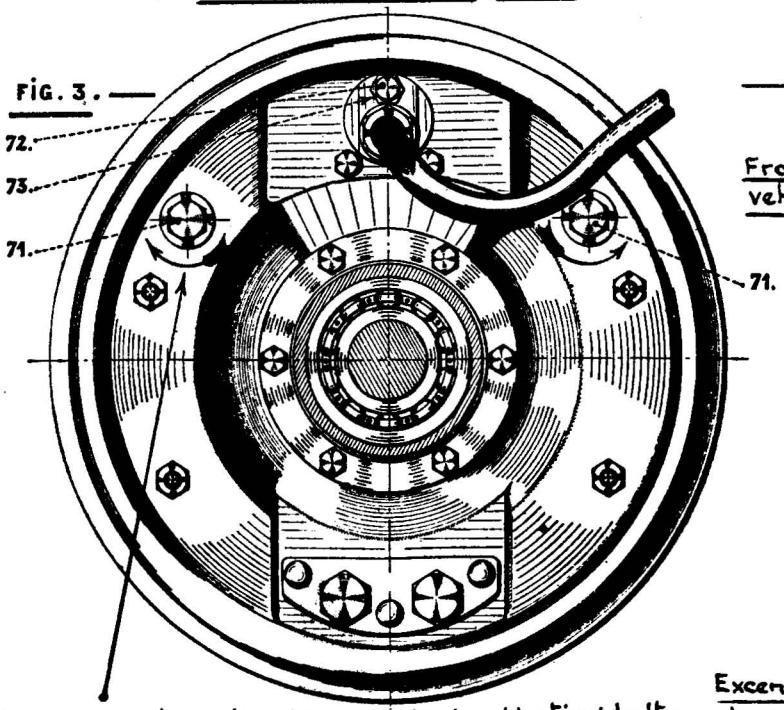

The arrows show direction in which adjusting bolts rotate in order to set shoes 27 and 28 nearer drum.

— Fig 2. —

Front of vehicle.

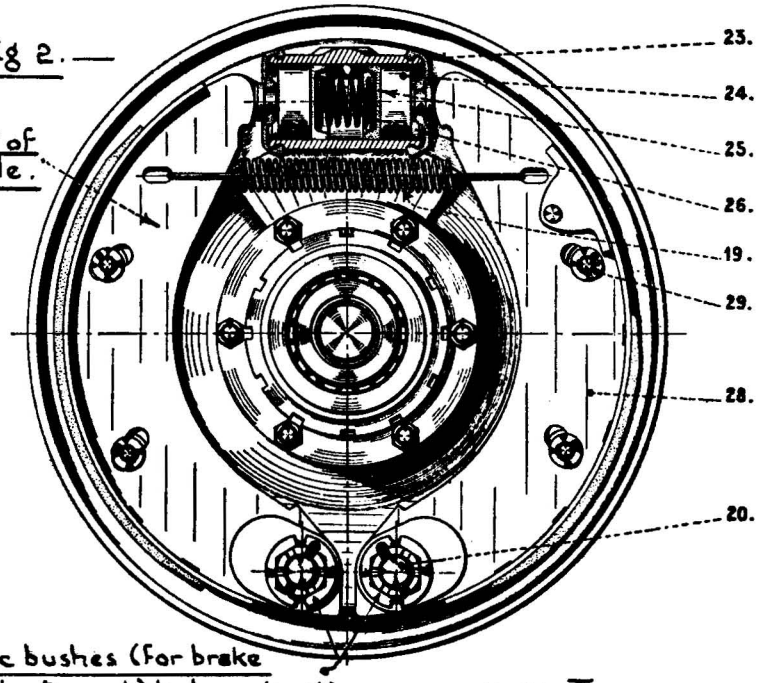

Excentric bushes (for brake shoe adjustment) to be set with spanner 2120-T.

—FRONT AXLE—

—FITTING OR REMOVING BRAKE SHOE RETURN SPRING—

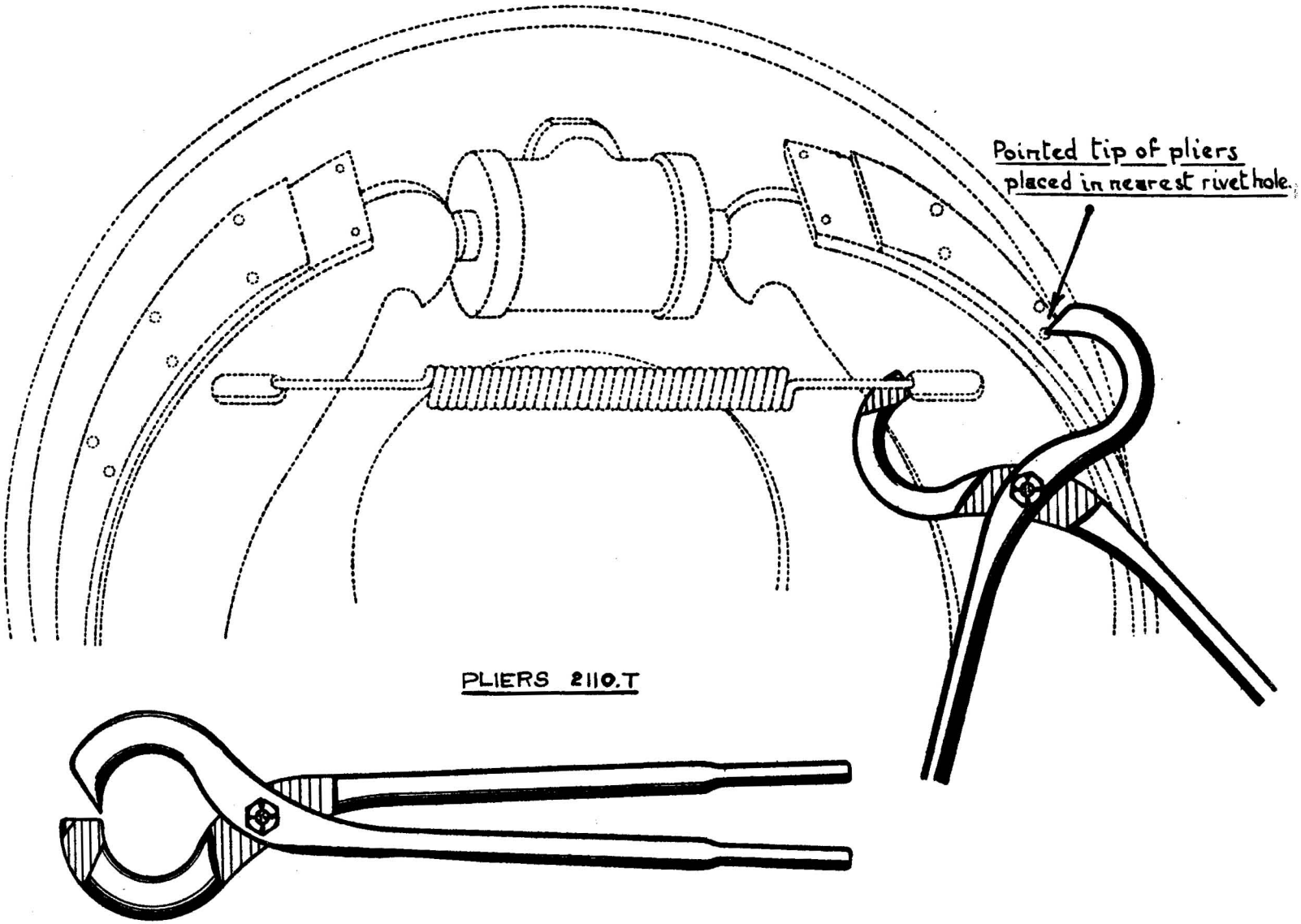

—FRONT AXLE—

—FLARING ADJUSTING CAMS OF BRAKE SHOES—

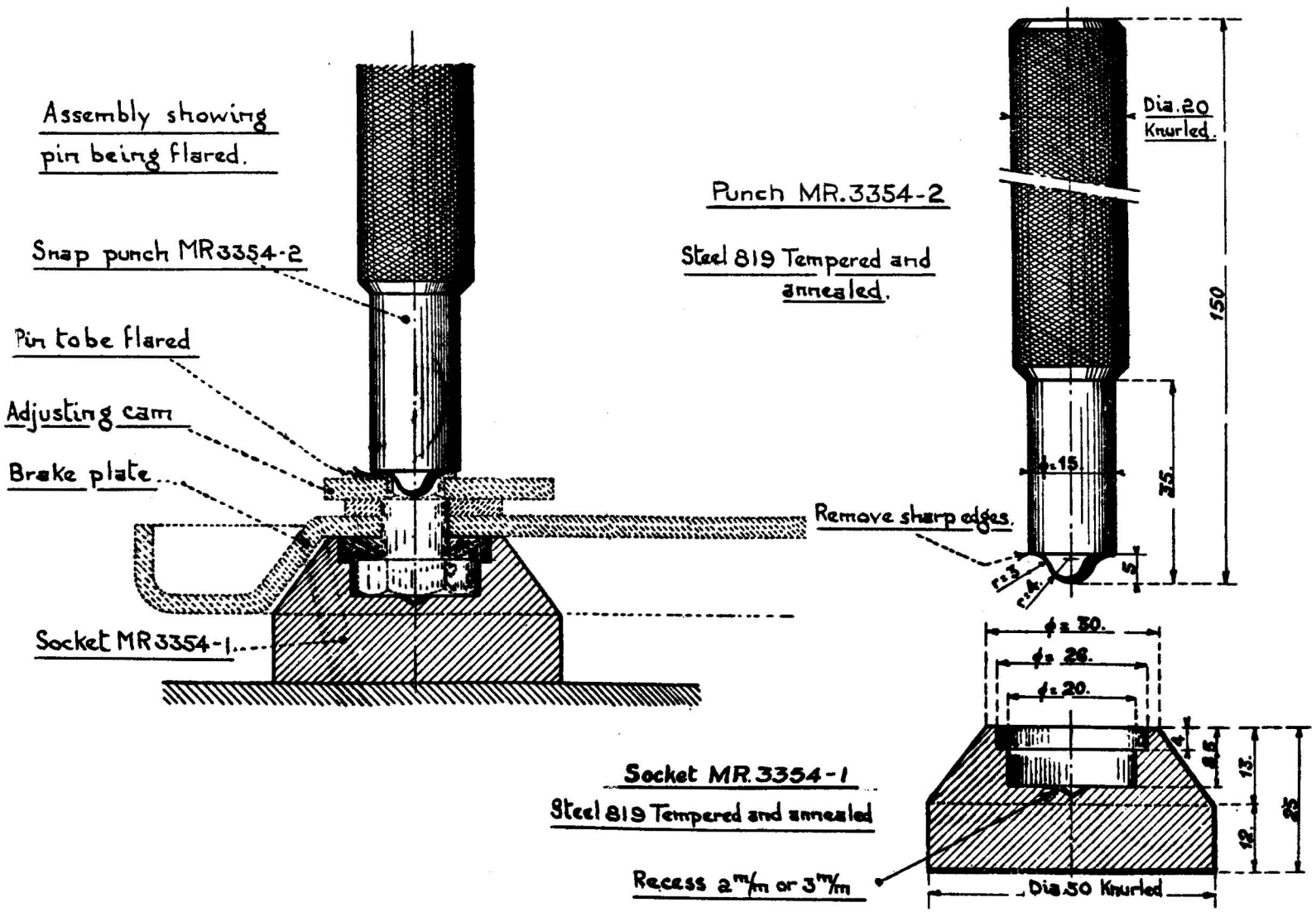

FRONT AXLE

REPLACEMENT OF WHEEL STUDS

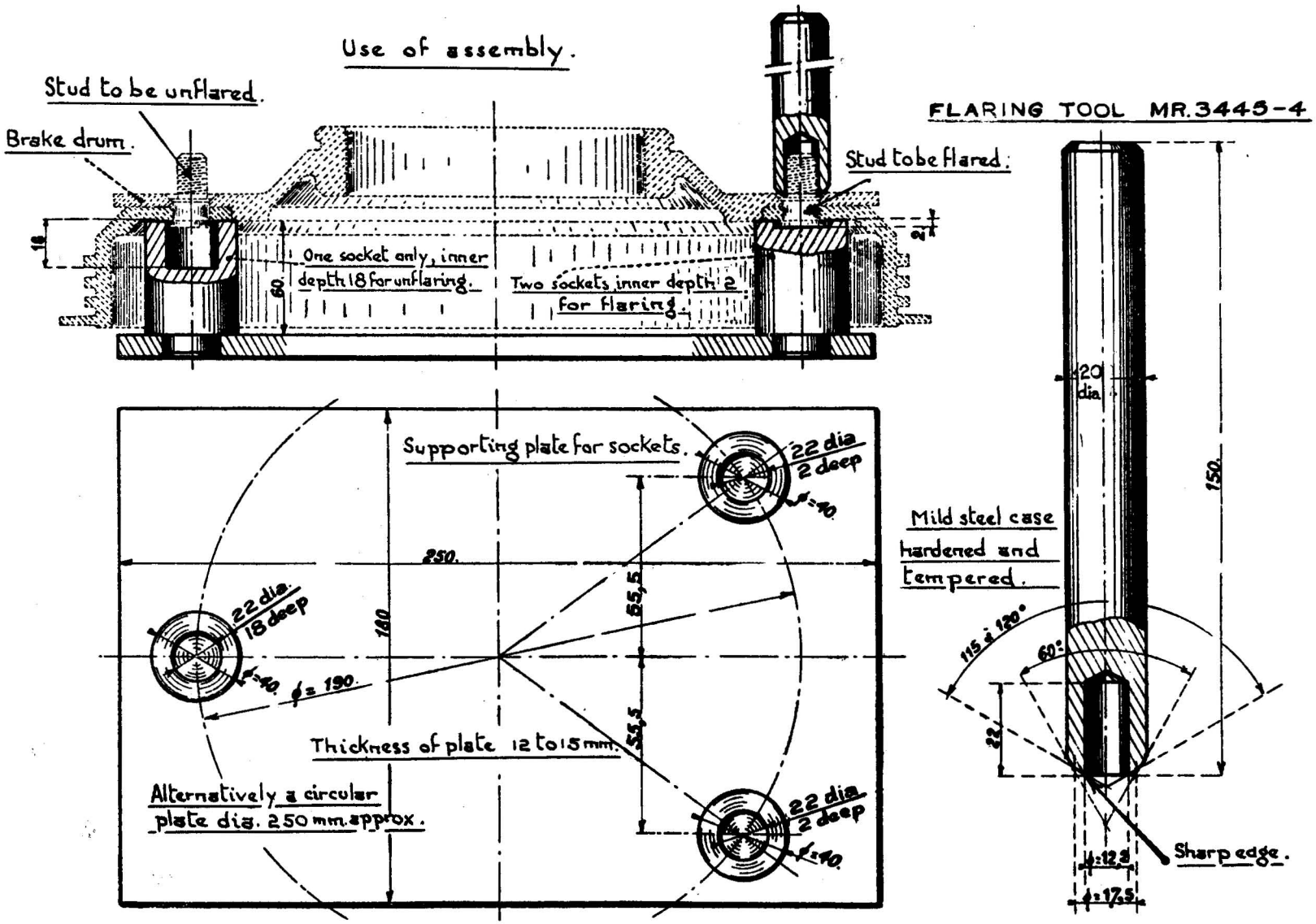

FRONT AXLE

RECTIFICATION OF BRAKE DRUMS

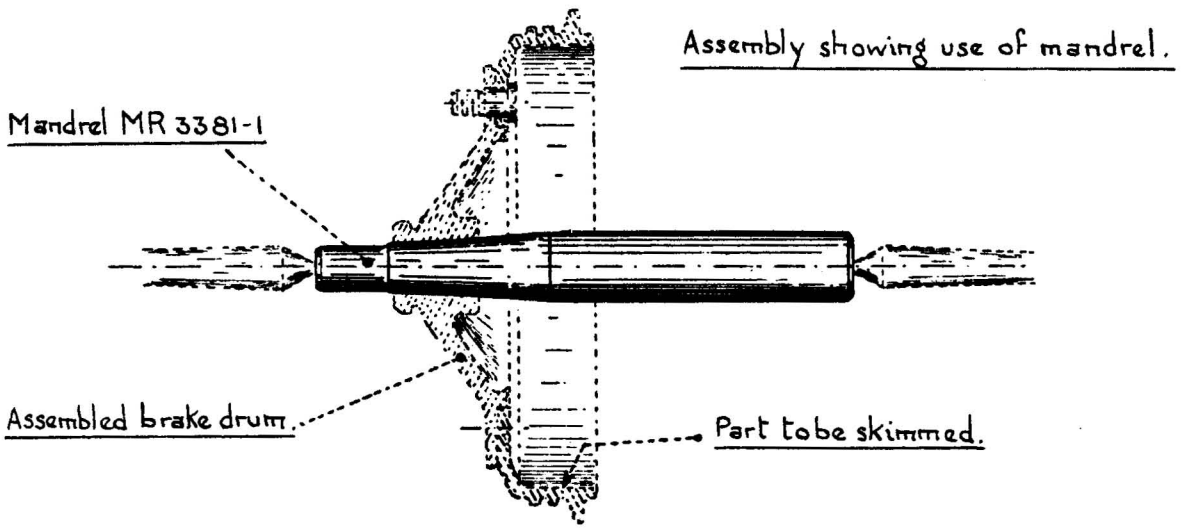

Mandrel MR 3381-1

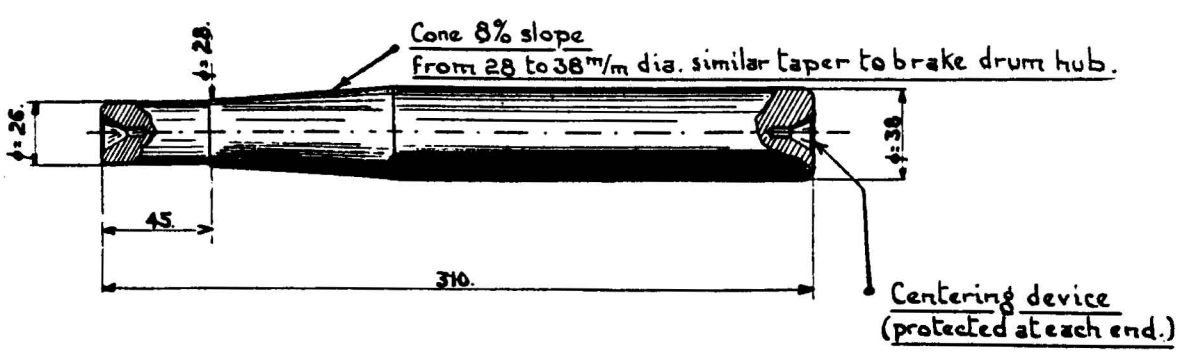

FRONT AXLE

ASSEMBLY OF SHAFTS

Sectional view.

Fig. 1.

Fig. 2.

Shim to reduce play at 'a'.

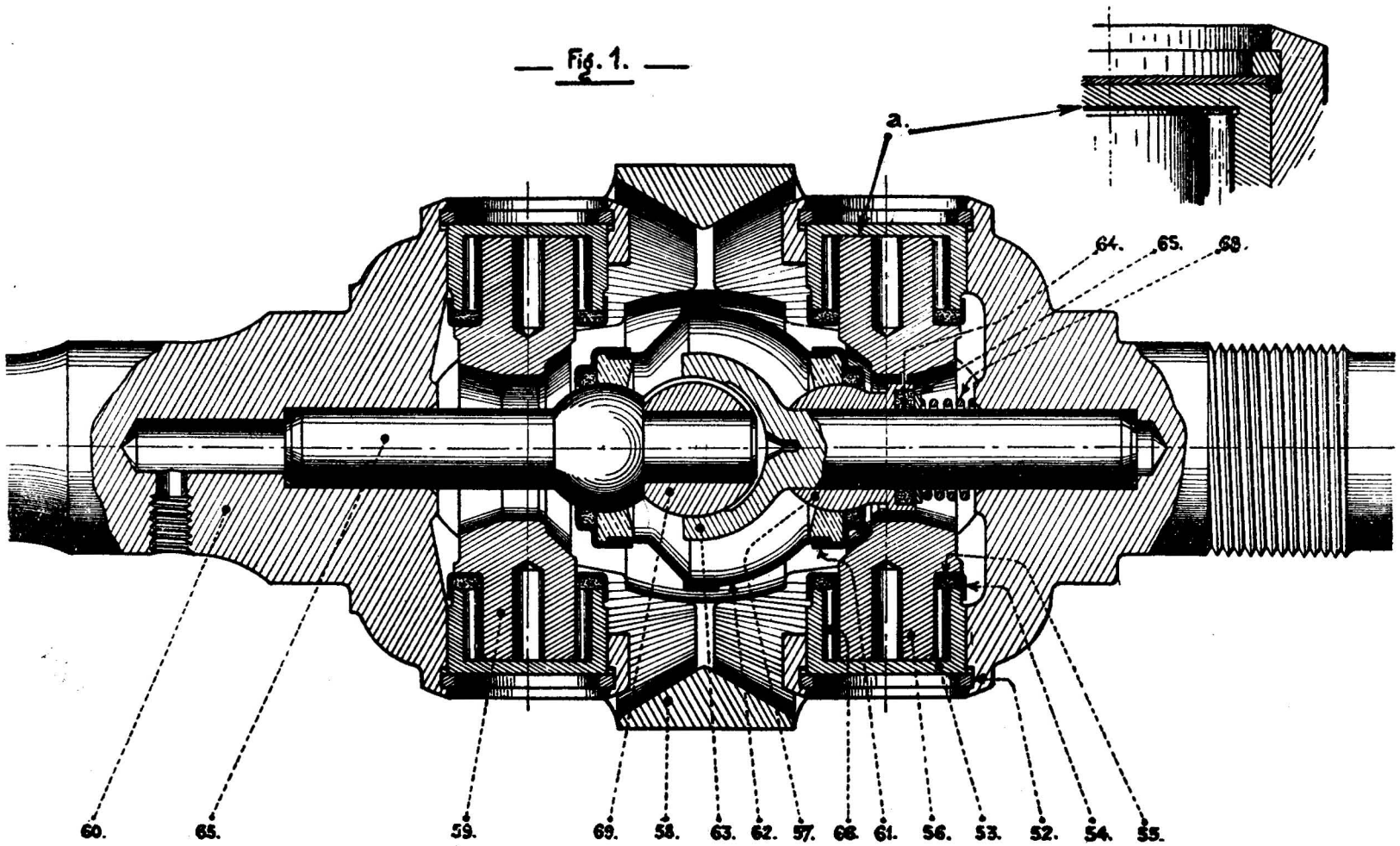

FRONT AXLE

DISMANTLING DRIVE SHAFTS

Dismantling yoke end of stub axle.

Fig. 1.

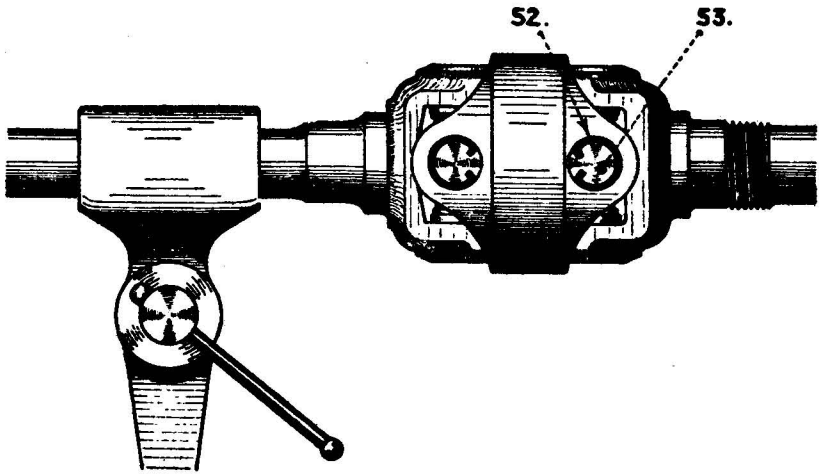

Fig. 2.

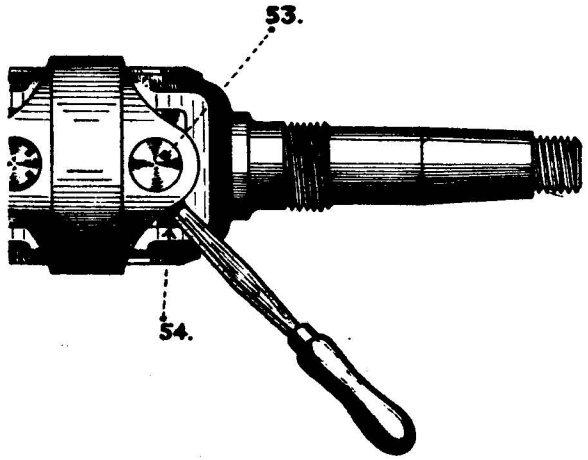

Fig. 3.

Removing yoke end of stub axle.

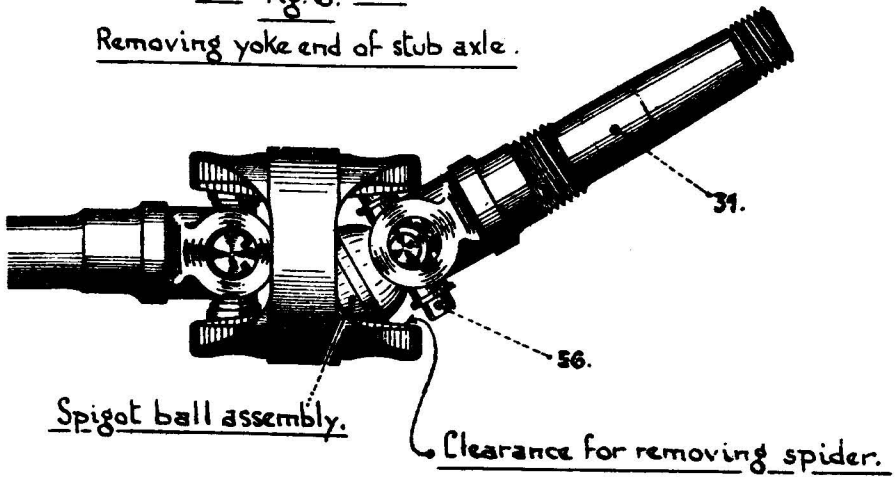

Fig 4.

Removing double yoke.

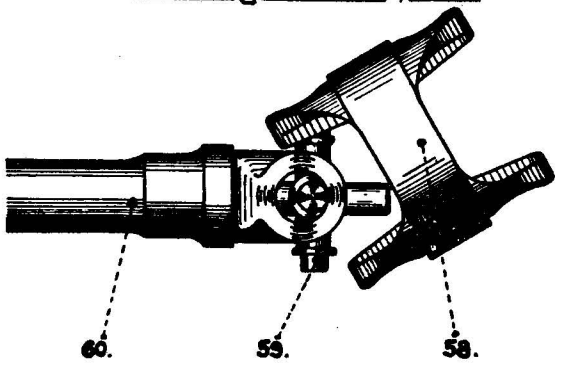

FRONT AXLE

DISMANTLING DRIVE SHAFTS

Fig. 5.
REMOVING SPIGOT BALL CASING.

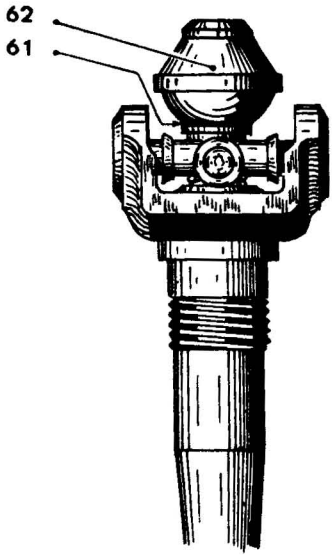

Fig. 6.
EXTRACTING SPIGOT CUP FROM STUB AXLE END.

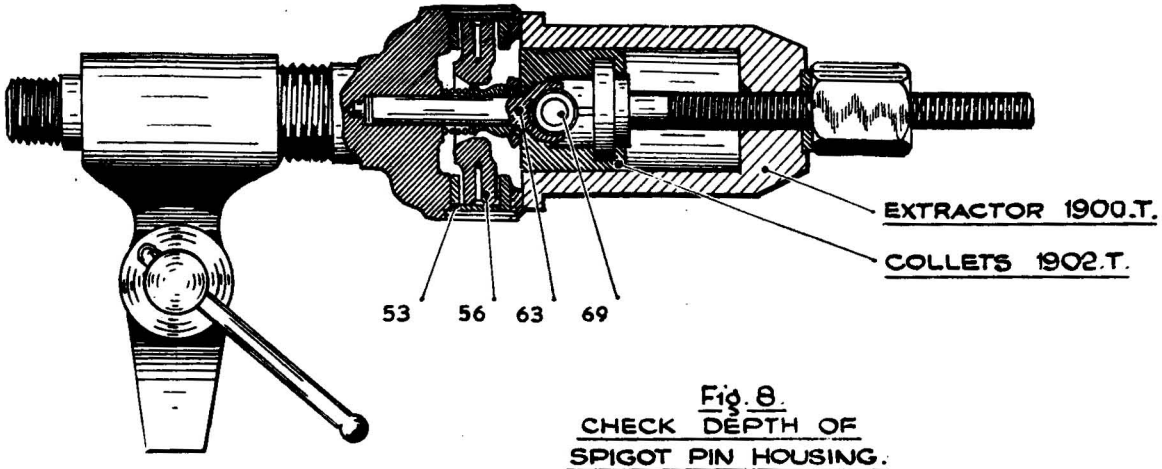

Fig. 8.
CHECK DEPTH OF SPIGOT PIN HOUSING.

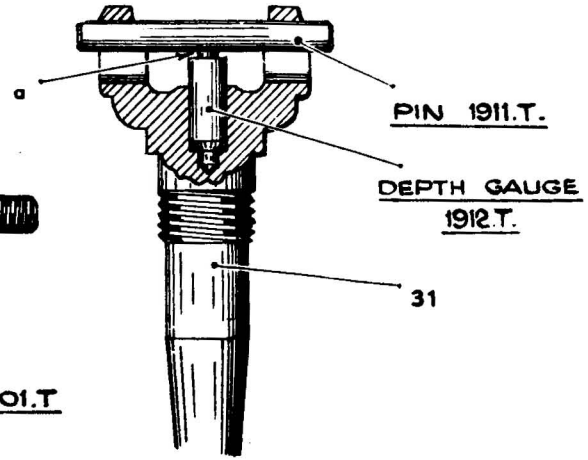

Tolerance at a = 0 to 0,125 mm.

Fig. 7.
EXTRACTING SPIGOT PIN FROM DRIVE SHAFT END.

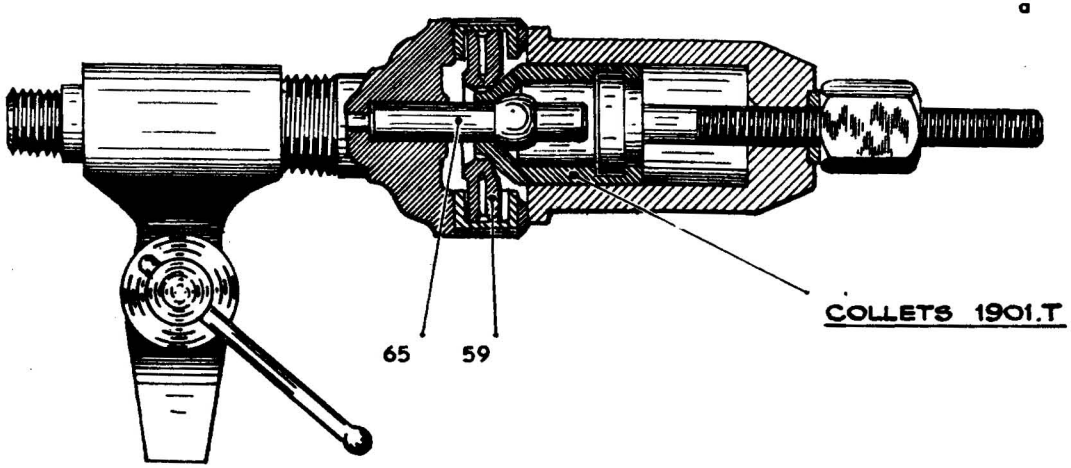

FRONT AXLE

ASSEMBLY OF DRIVE SHAFTS

Fig. 9.
PLACING SPIDER AT STUB AXLE END.

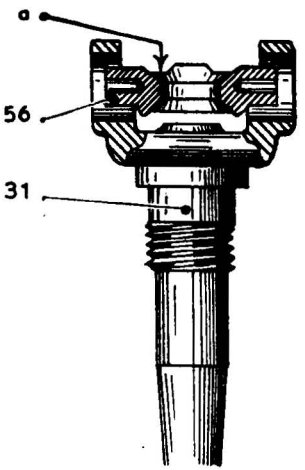

Fig. 10.
FITTING SPIGOT CUP.

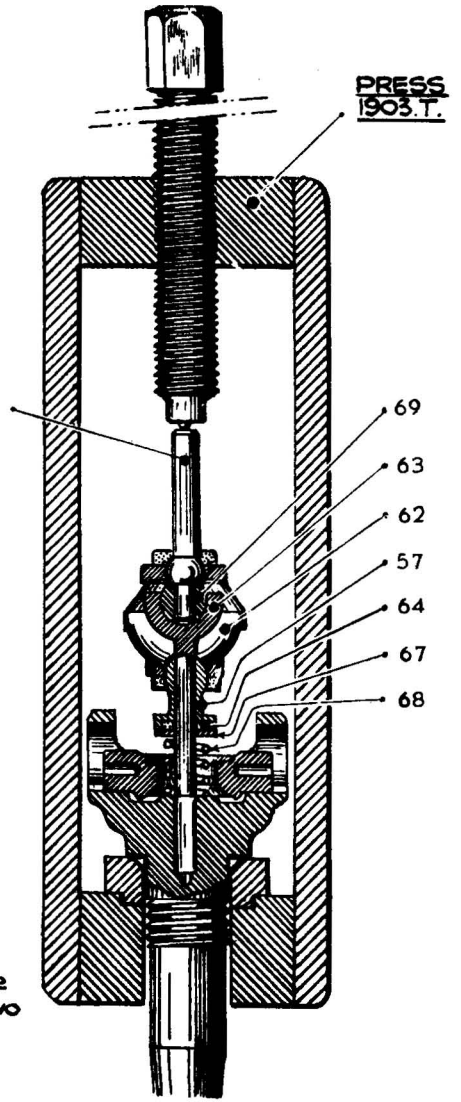

Fig. 11.
MODIFIED SPIGOT PIN.

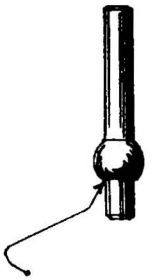

GRIND ROUNDED PART AT BASE TO OBTAIN A FLAT FOR SEATING ON BALL TOP: 69. THIS PREVENTS PARTS FROM SEIZING WHILE SPIGOT CUP, 63 IS BEING FORCED INTO POSITION.

Fig. 12. CHECKING POSITION OF INNER SPIGOT BALL.

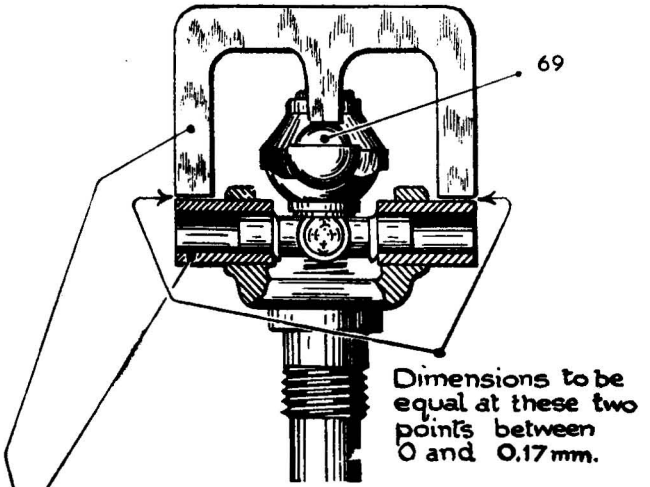

BEARING HOUSING GAUGE 1910.T.

THREE POINT CONTACT GAUGE 1908.T.

Fig. 13. FITTING SPIDER AT DRIVESHAFT END.

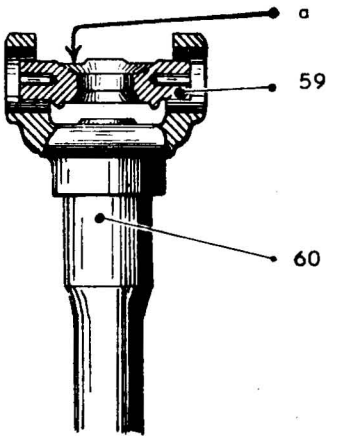

FRONT AXLE

ASSEMBLY OF DRIVE SHAFTS

FITTING OF SPIGOT PIN

Fig. 14.

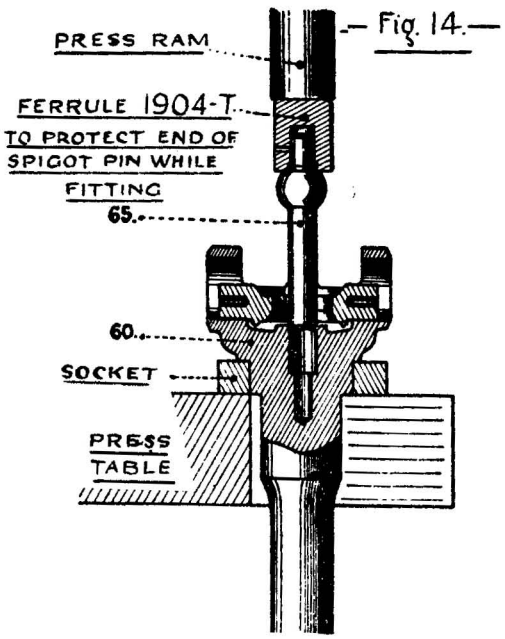

Fig. 15.

FITTING DOUBLE YOKE ON STUB AXLE END

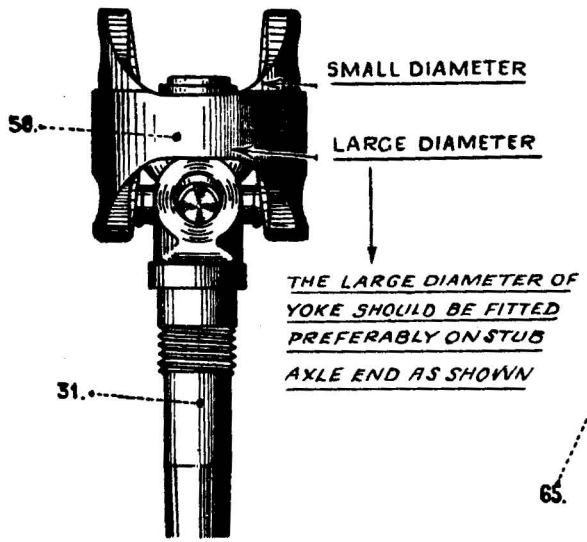

Fig. 16.

FITTING DRIVE SHAFT END TO DOUBLE YOKE

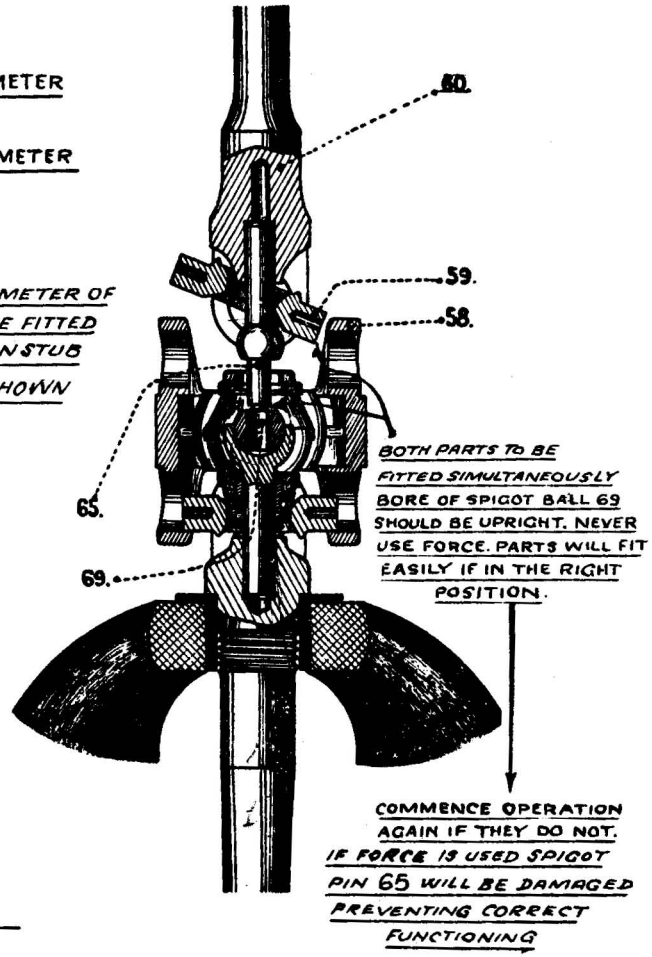

Fig. 18.

CHECKING FIT OF CIRCLIPS

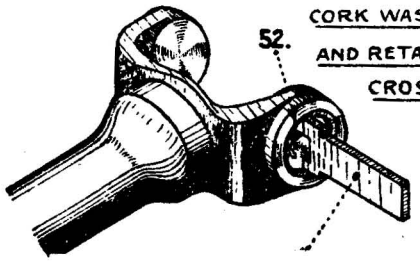

DEPTH GAUGE 1909-T

Fig. 17.

FITTING CORK WASHER RETAINER

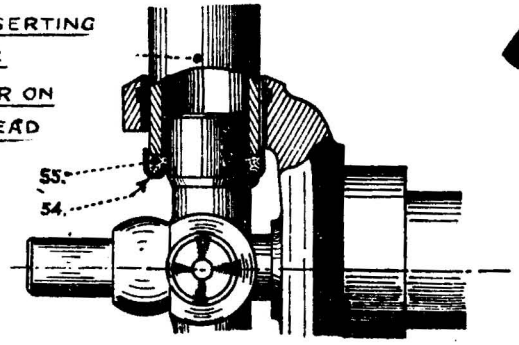

FRONT AXLE

REBORING SPLINE HOUSING OF COUPLING

Fig. 1. DIAGRAM SHOWING ASSEMBLY BEING PREPARED

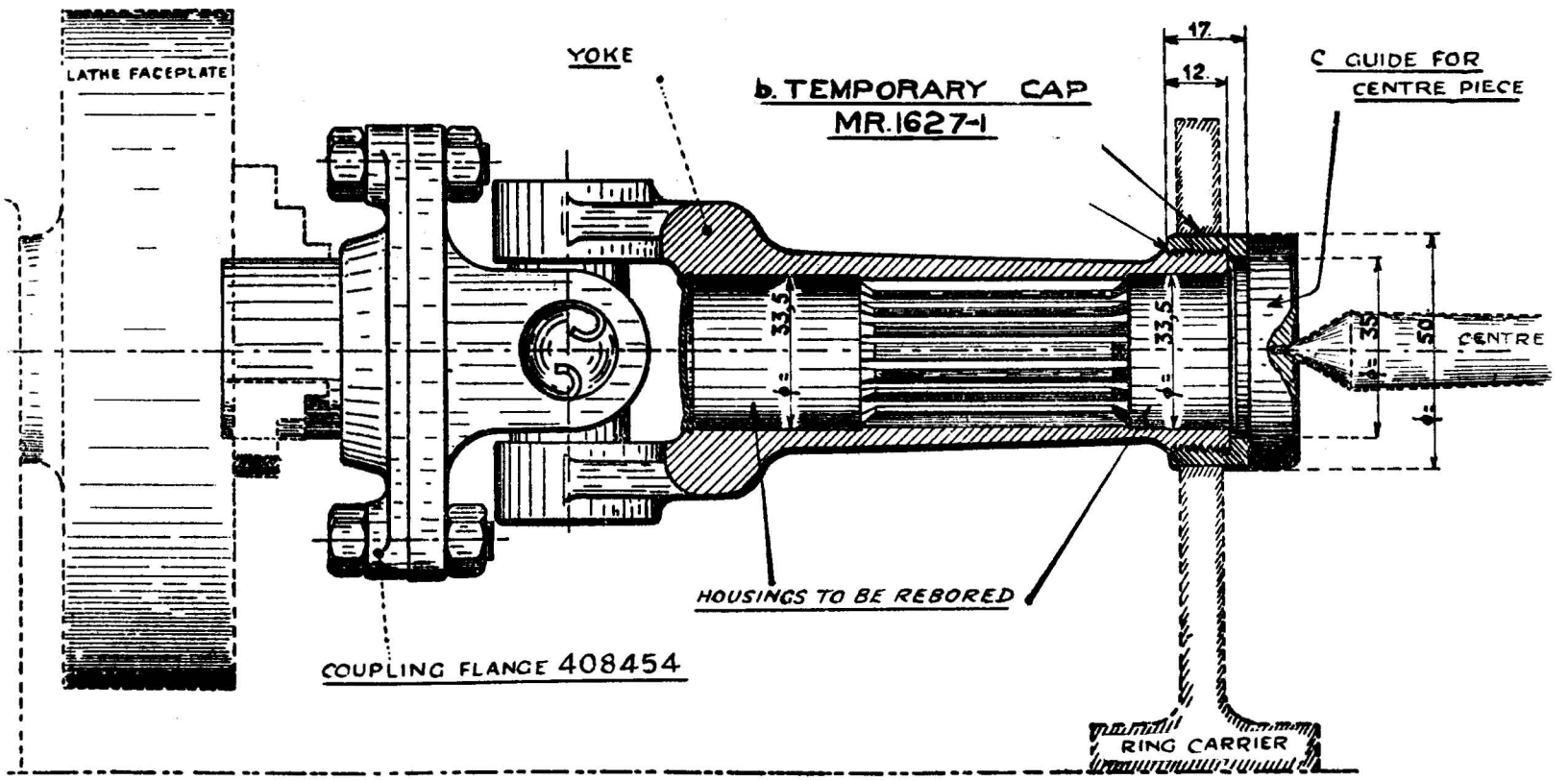

Fig 2
c. GUIDE MR.1627-2

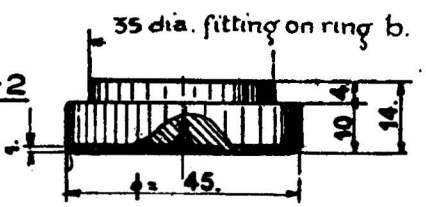

FRONT AXLE

ASSEMBLY OF STUB AXLE END AND BALL-RACE INTO SWIVEL

TOOL FOR DISMANTLING STUB AXLE 1824 T.

TOOL ALREADY MENTIONED ON ILLUSTRATION 48.

Fig. 1.

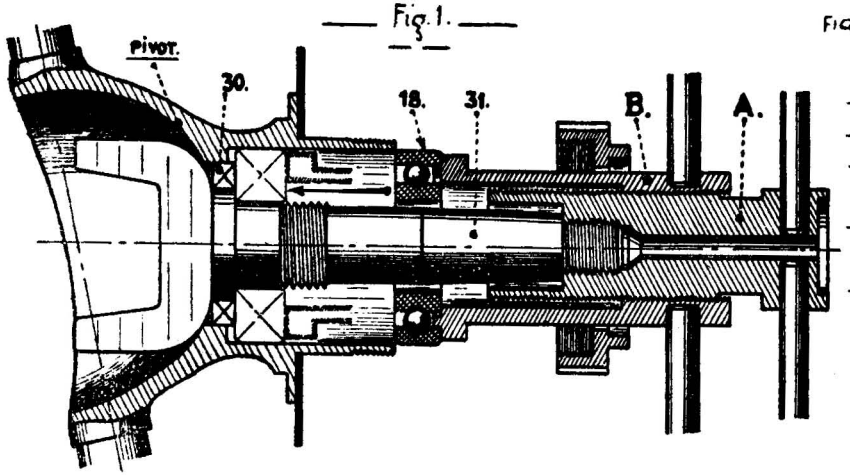

FIG. 1. FITTING INNER BALL-RACE

- PLACE STUB AXLE 31 IN SWIVEL
- PLACE BALL-RACE 18 IN FRONT OF SWIVEL
- LOCK PART A ON STUB AXLE 31. (RIGHT OR LEFT ACCORDING TO SIDE)
- TURN B RIGHT KEEPING A STEADY BY MEANS OF HANDLE

RELEASING TOOL

- UNSCREW A (RIGHT OR LEFT ACCORDING TO SIDE)

Fig. 2.

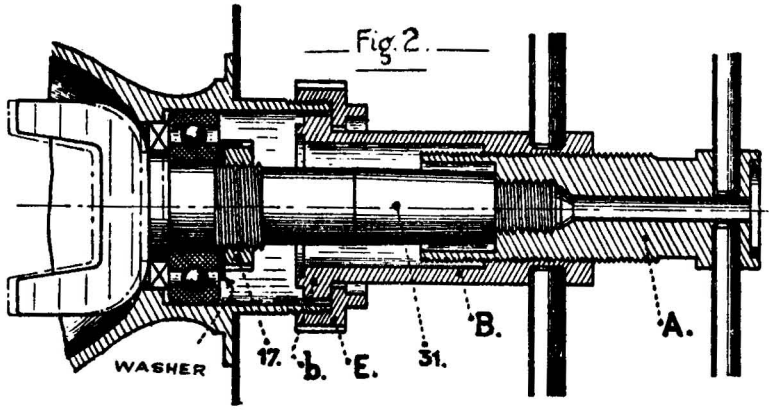

FIG. 2. FITTING STUB AXLE AND SWIVEL ASSEMBLY CORRECTLY

- FIT LOCKWASHER FOR NUT: 17.
- SCREW NUT: 17 WITH SPANNER 1826-T (SEE ILLUSTRATION 47) BEND TAB INTO POSITION
- SCREW A ON AXLE 31 (RIGHT OR LEFT ACCORDING TO SIDE)
- TURN B RIGHT DRIVING b INTO SWIVEL. SCREW E ON SWIVEL.
- TURN B LEFT KEEPING A STEADY UNTIL BALL-RACE IS ON SEATING

RELEASING TOOL

- UNSCREW E, UNSCREW A. (RIGHT OR LEFT ACCORDING TO SIDE)

Fig. 3.

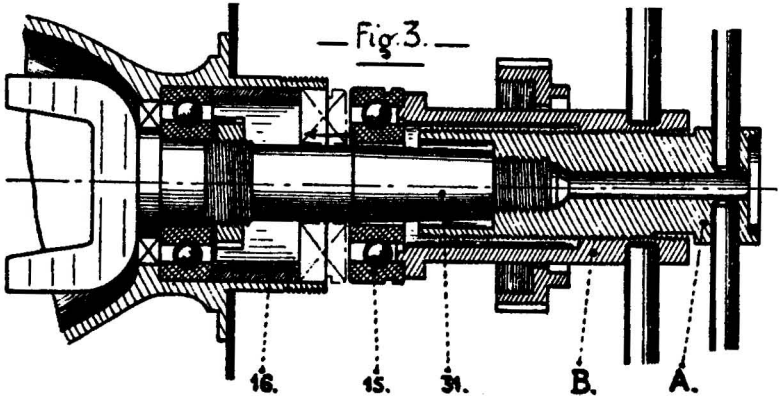

FIG. 3. FITTING OUTER STUB AXLE BALL-RACE

- PLACE DISTANCE PIECE: 16.
- PLACE BALL-RACE: 15, ON STUB AXLE 31.
- SCREW A ON STUB AXLE 31 (RIGHT OR LEFT ACCORDING TO SIDE)
- TURN B RIGHT, KEEPING A STEADY, TILL BALL-RACE 15 IS ON SEATING

RELEASING TOOL

- UNSCREW A (RIGHT OR LEFT ACCORDING TO SIDE)

— FRONT AXLE —

— CHECKING CONCENTRICITY OF BRAKE LININGS —

CONCENTRICITY CHECKING APPARATUS

2100 T

— Fig. 1. —

REGISTERING DIAMETER OF DRUM

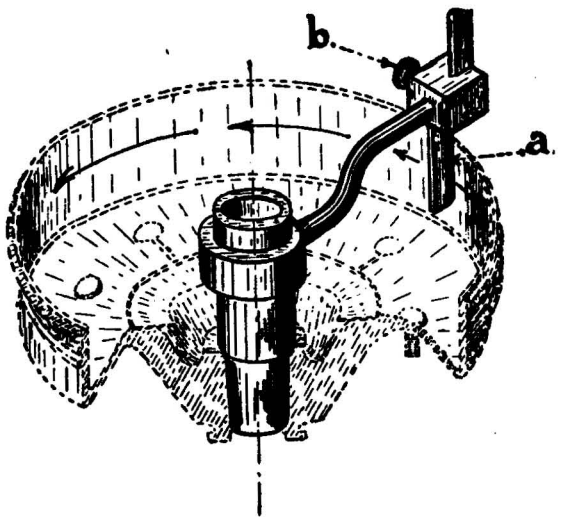

— Fig. 2. —

CHECKING CONCENTRICITY OF LININGS

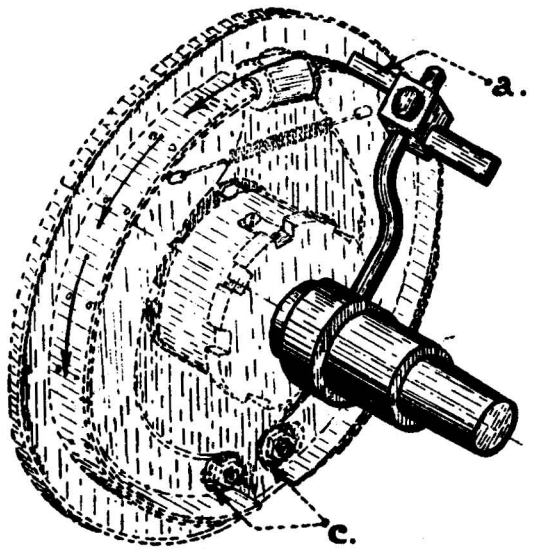

— INSERT INSTRUMENT INTO DRUM
— BRING INDICATOR a, INTO CONTACT WITH DRUM AND DESCRIBE COMPLETE CIRCLE.
— LOCK INDICATOR AT SET POSITION WITH THUMB-SCREW b.

— FIT INSTRUMENT ON STUB (WITH KEY REMOVED)
— PLACE INDICATOR: a, AS PREVIOUSLY SET ON LININGS, INDICATOR MUST REMAIN IN CONTACT THROUGHOUT CIRCUMFERENCE (*IN ORDER TO OBTAIN THIS RESULT, ADJUST LININGS BY ECCENTRIC BUSHES; C, AND ADJUSTING CAMS AT REAR OF BACK-PLATE, NOT SHOWN*)
— REMOVE BURRS ON LININGS WITH RASP.

AFTER CHECK, RELEASE CAMS TO ALLOW FITTING OF DRUM (FOR FINAL ADJUSTMENT OF CAMS, SEE OPERATION 150 PARA. 2.

REMOVING AND REFITTING STEERING WHEEL

Fig. 1. - LOCATING FIXED TUBE.

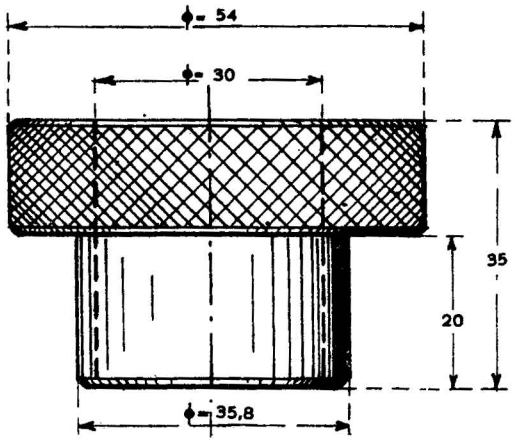

BUSH. MR. 3102

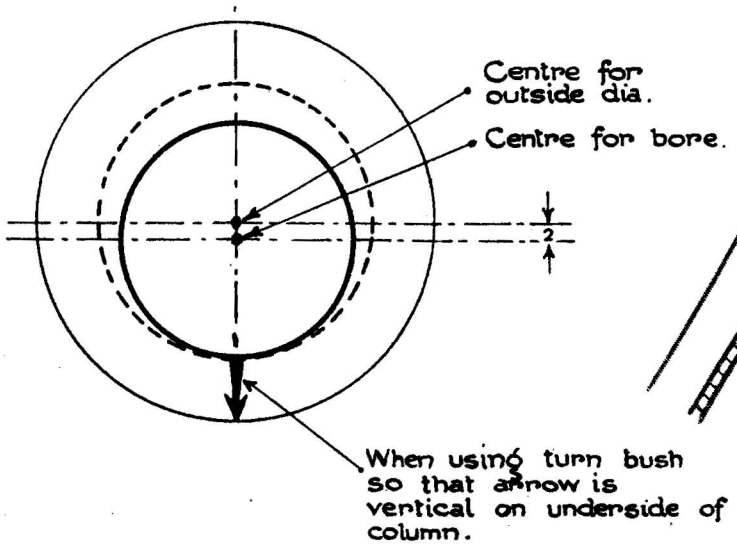

Fig. 2. REMOVING STEERING WHEEL.

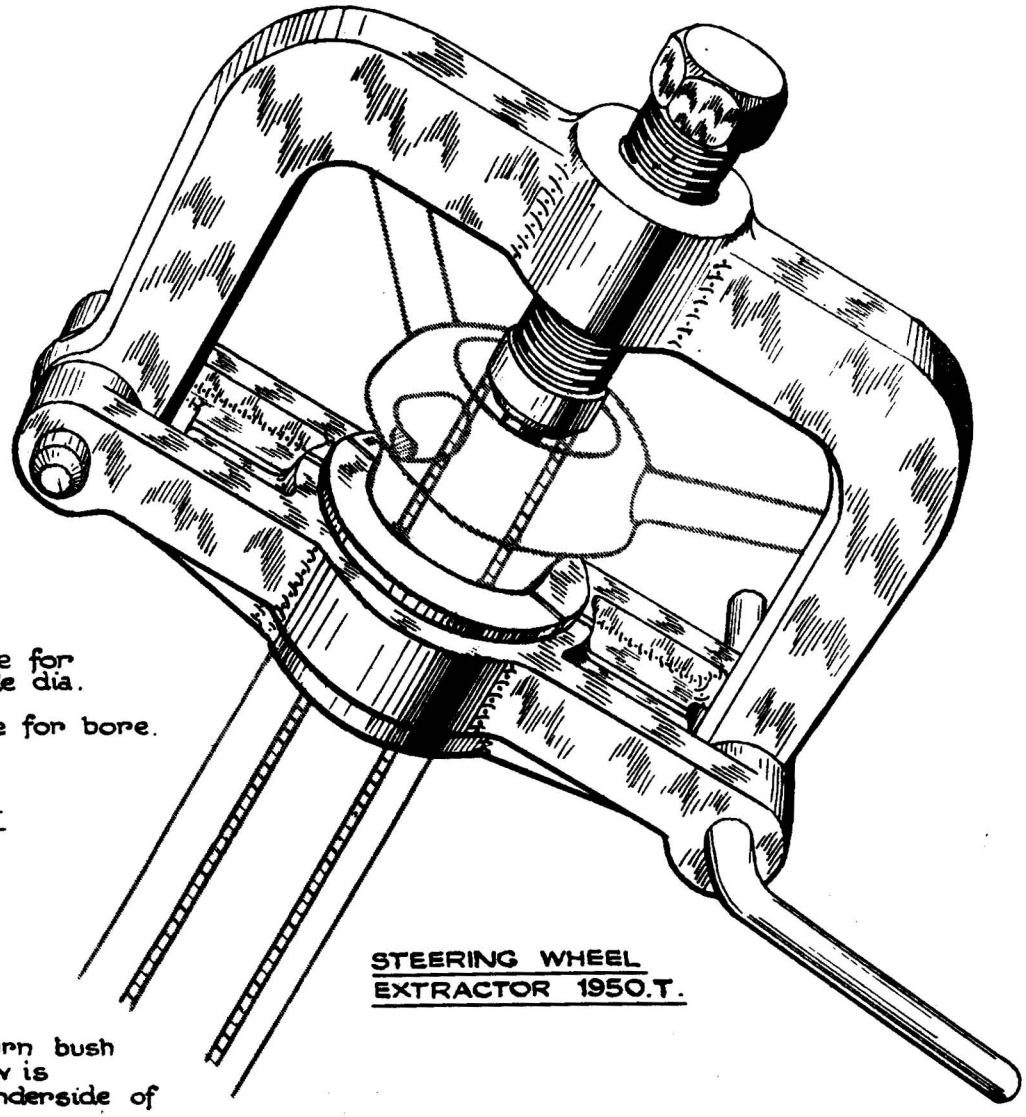

STEERING WHEEL EXTRACTOR 1950.T.

STEERING ASSEMBLY

SECTIONAL VIEW THROUGH CASING

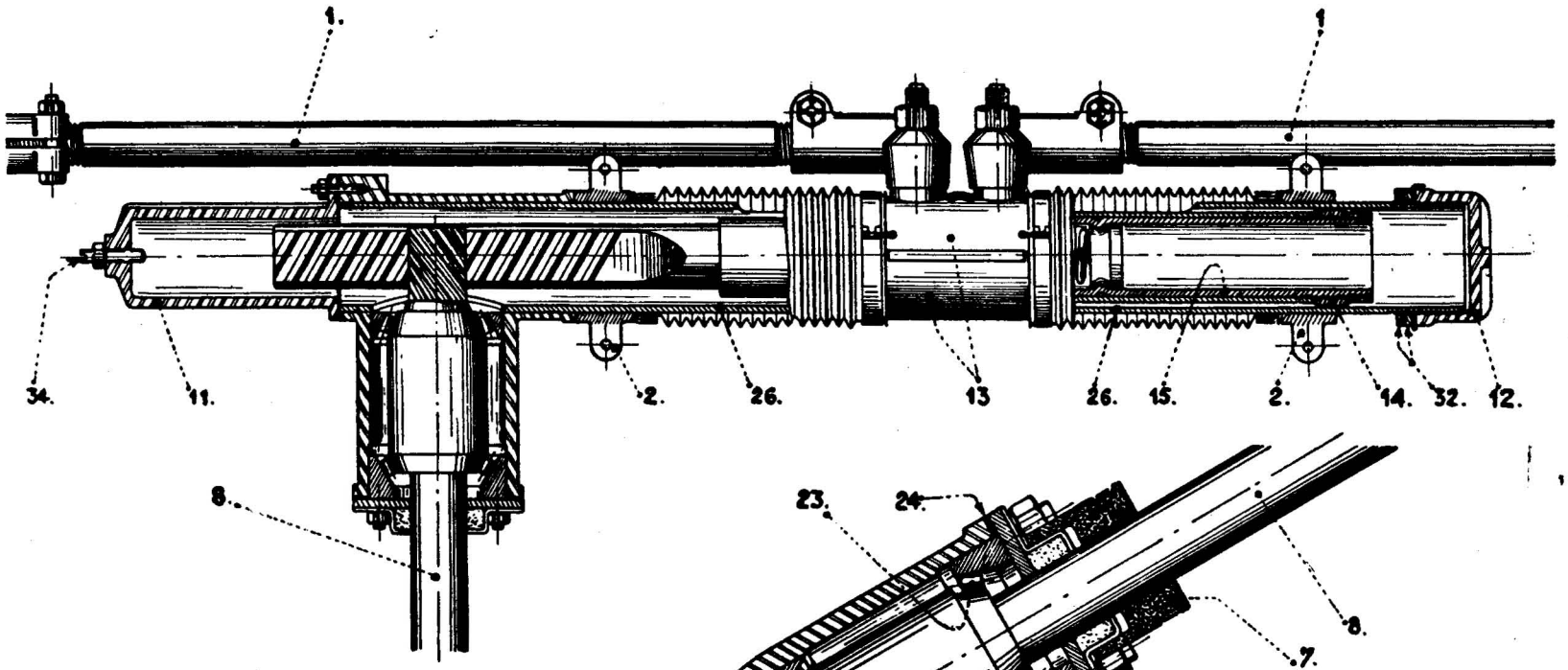

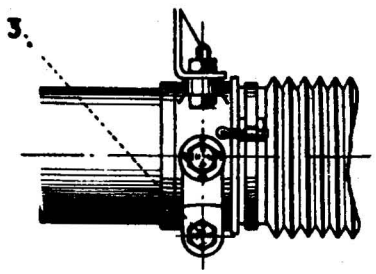

DETAILS OF FITTING OF CONCENTRIC RUBBERS

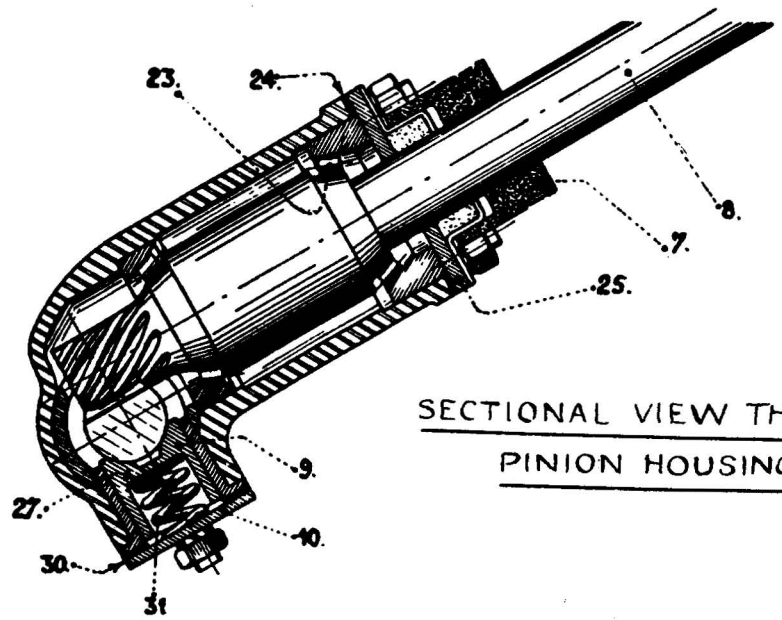

SECTIONAL VIEW THROUGH PINION HOUSING

STEERING

ASSEMBLY OF BALL PINS

FIG.1. SECTIONAL VIEW SHOWING BALL PINS

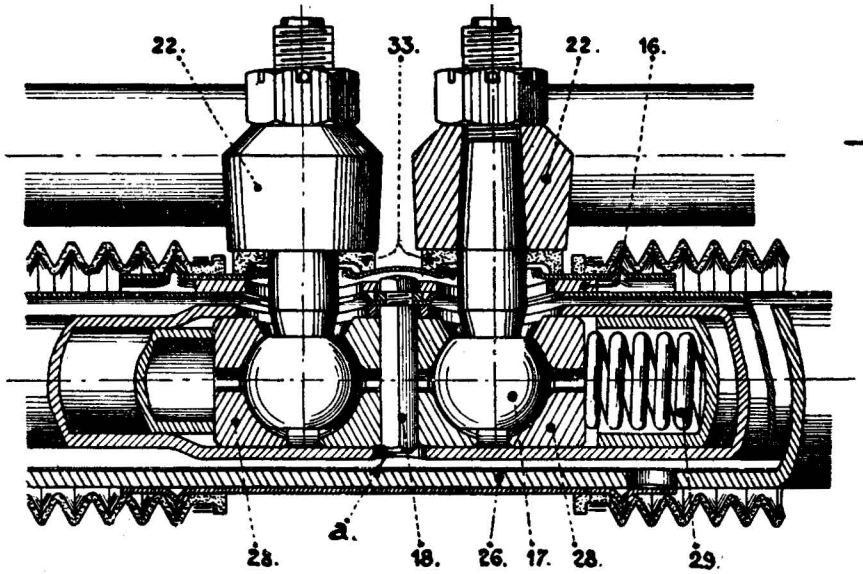

— Fig. 3. —

FIG.2. SECTIONAL VIEW THROUGH DOWEL PIN

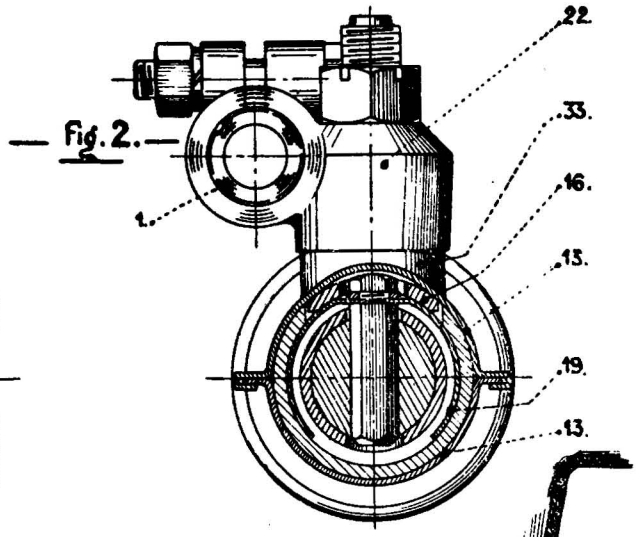

FIG.3. CHECKING TOLERANCE OF RING NUT

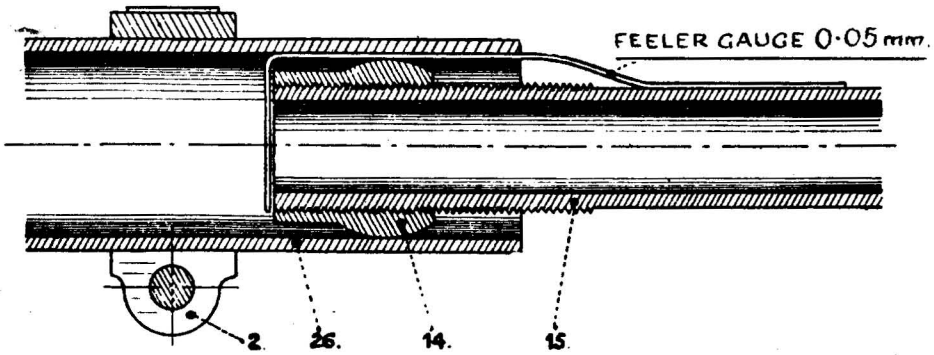

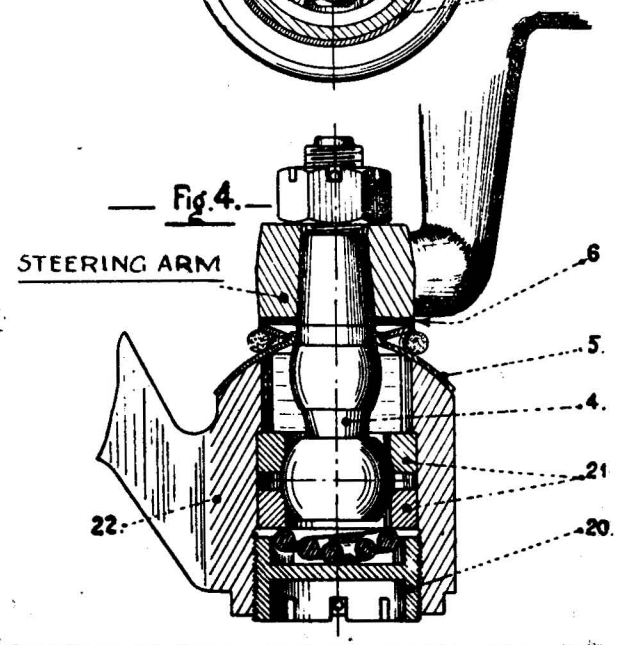

FIG. 4. ASSEMBLY OF BALL PINS AT TRACK ROD END

HOLDING RACK AND PINION GEAR IN VICE

ASSEMBLY SHOWING USE OF CLAMP MR.1561

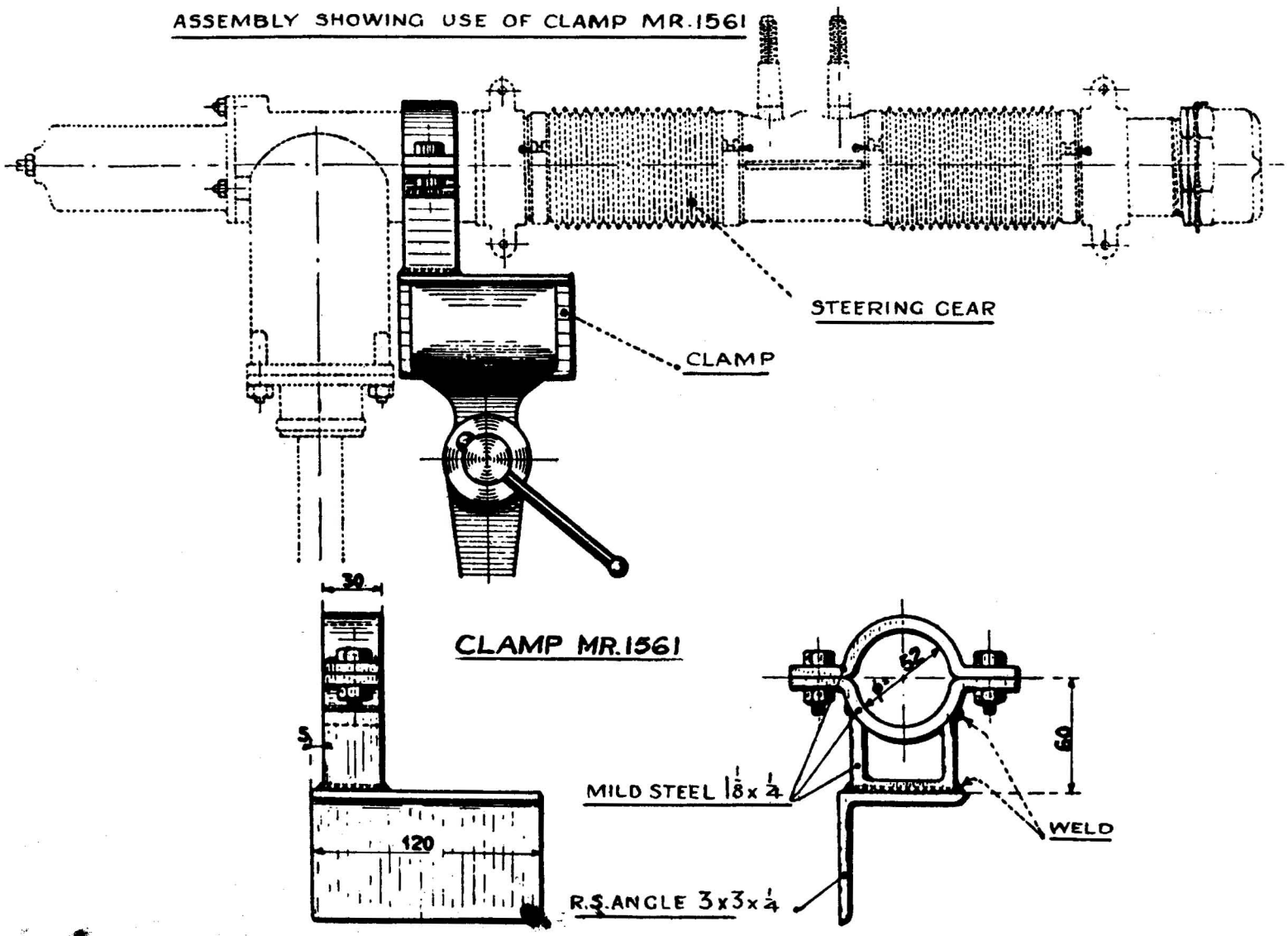

VARIOUS TOOLS

Fig. 1. COMBINATION SPANNER FOR RETAINING TUBE AND RING NUT 1976.T.

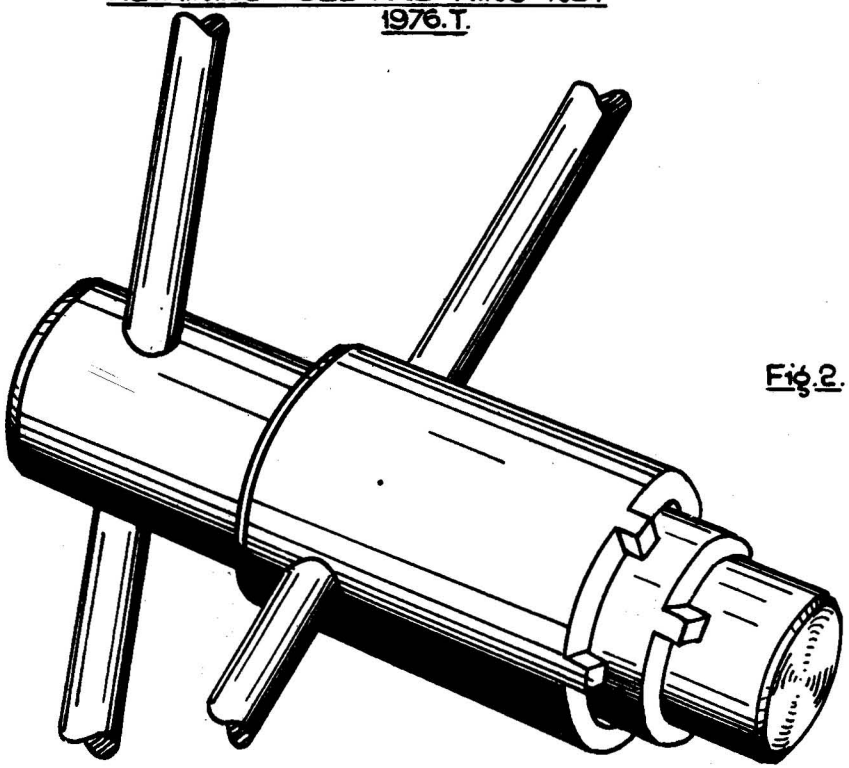

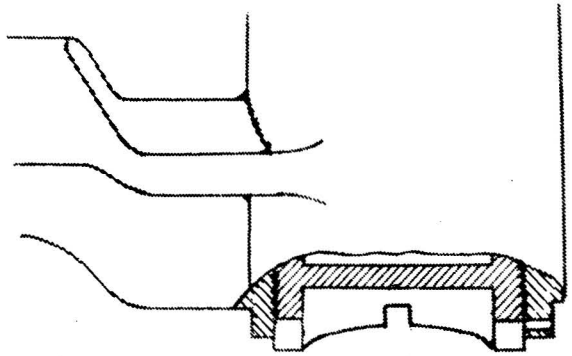

Fig. 2. SPANNER FOR ADJUSTING NUT ON OUTER BALL PIN CUP. 1870.T.

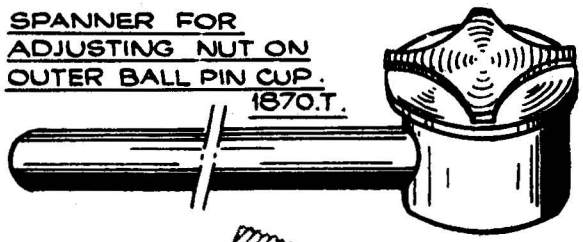

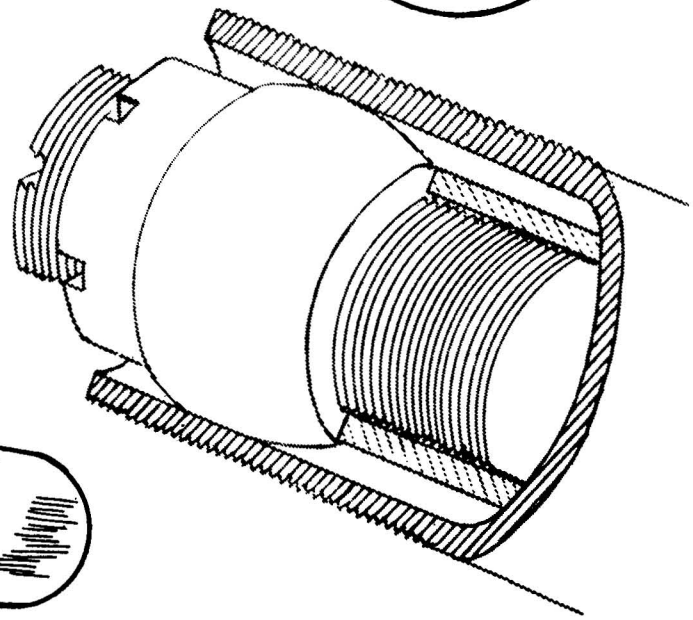

Fig. 3. SPANNER FOR STEERING RACK TUBE CAP. 1975.T.

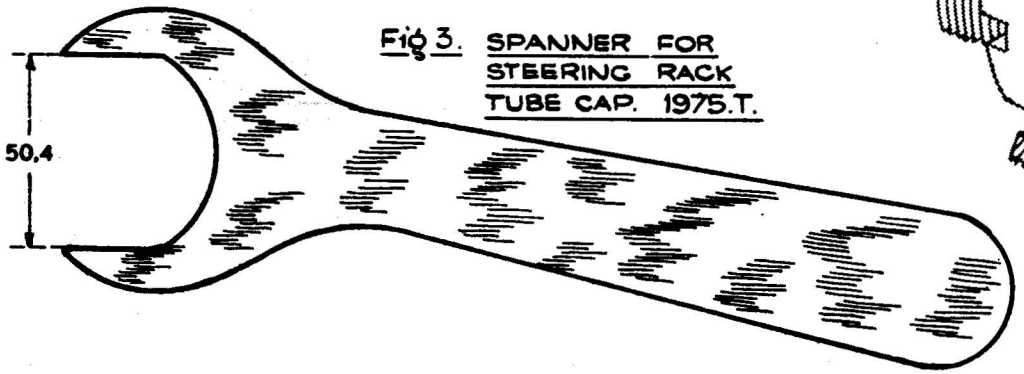

STEERING

ADJUSTING LENGTH OF TRACK ROD

ASSEMBLY SHOWING USE OF GAUGE

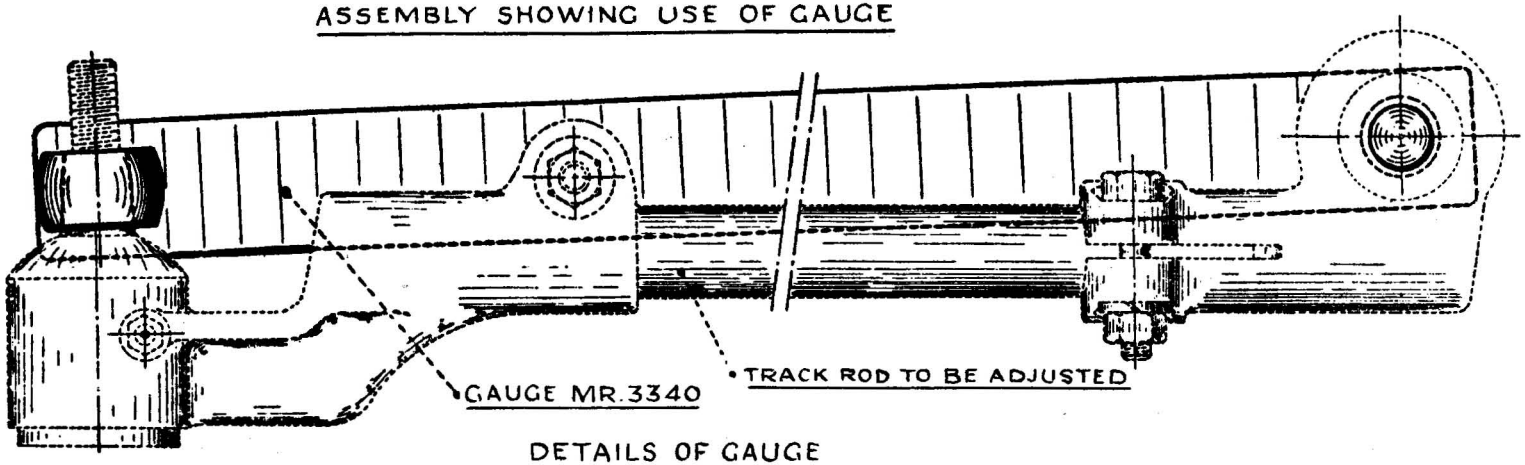

DETAILS OF GAUGE

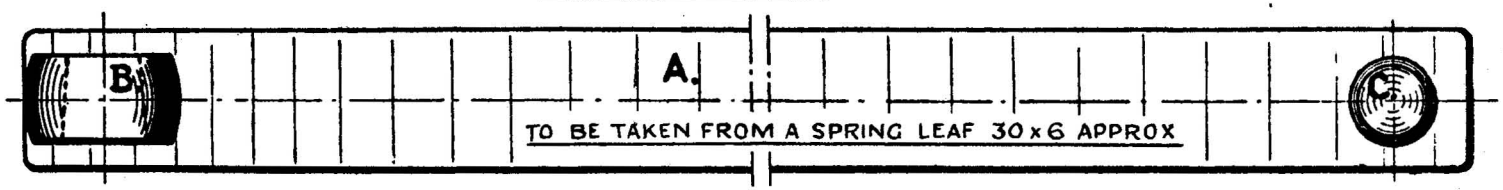

NOTE OFFSET OF CONES.

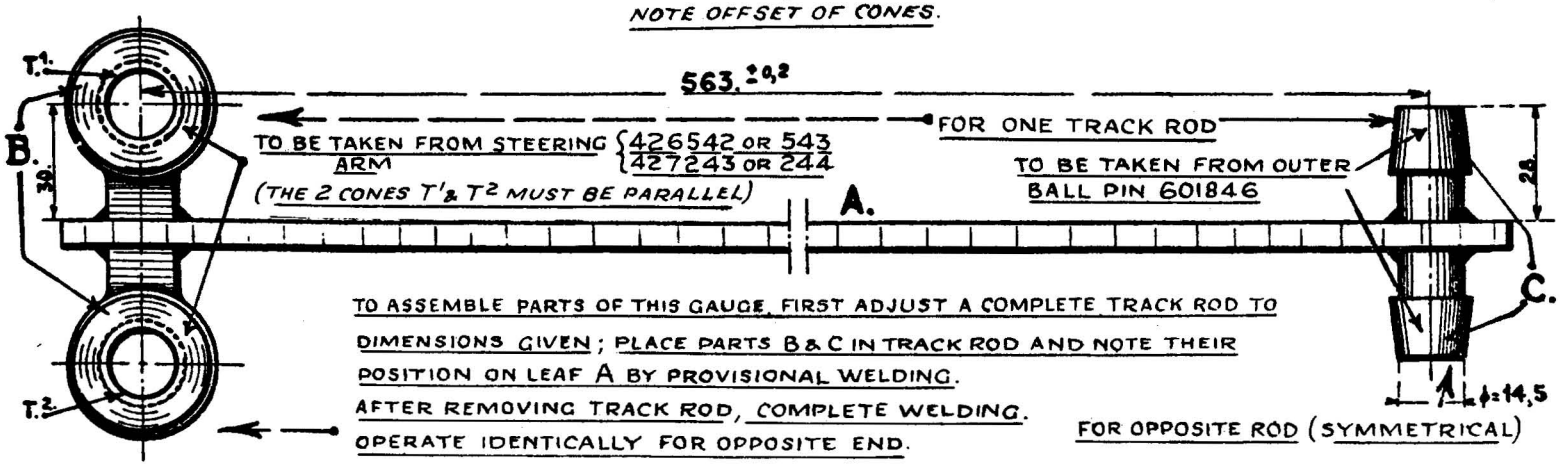

TO ASSEMBLE PARTS OF THIS GAUGE, FIRST ADJUST A COMPLETE TRACK ROD TO DIMENSIONS GIVEN; PLACE PARTS B & C IN TRACK ROD AND NOTE THEIR POSITION ON LEAF A BY PROVISIONAL WELDING.
AFTER REMOVING TRACK ROD, COMPLETE WELDING.
OPERATE IDENTICALLY FOR OPPOSITE END.

REAR AXLE

RAISING REAR AXLE

BRACKET MR.3300-110

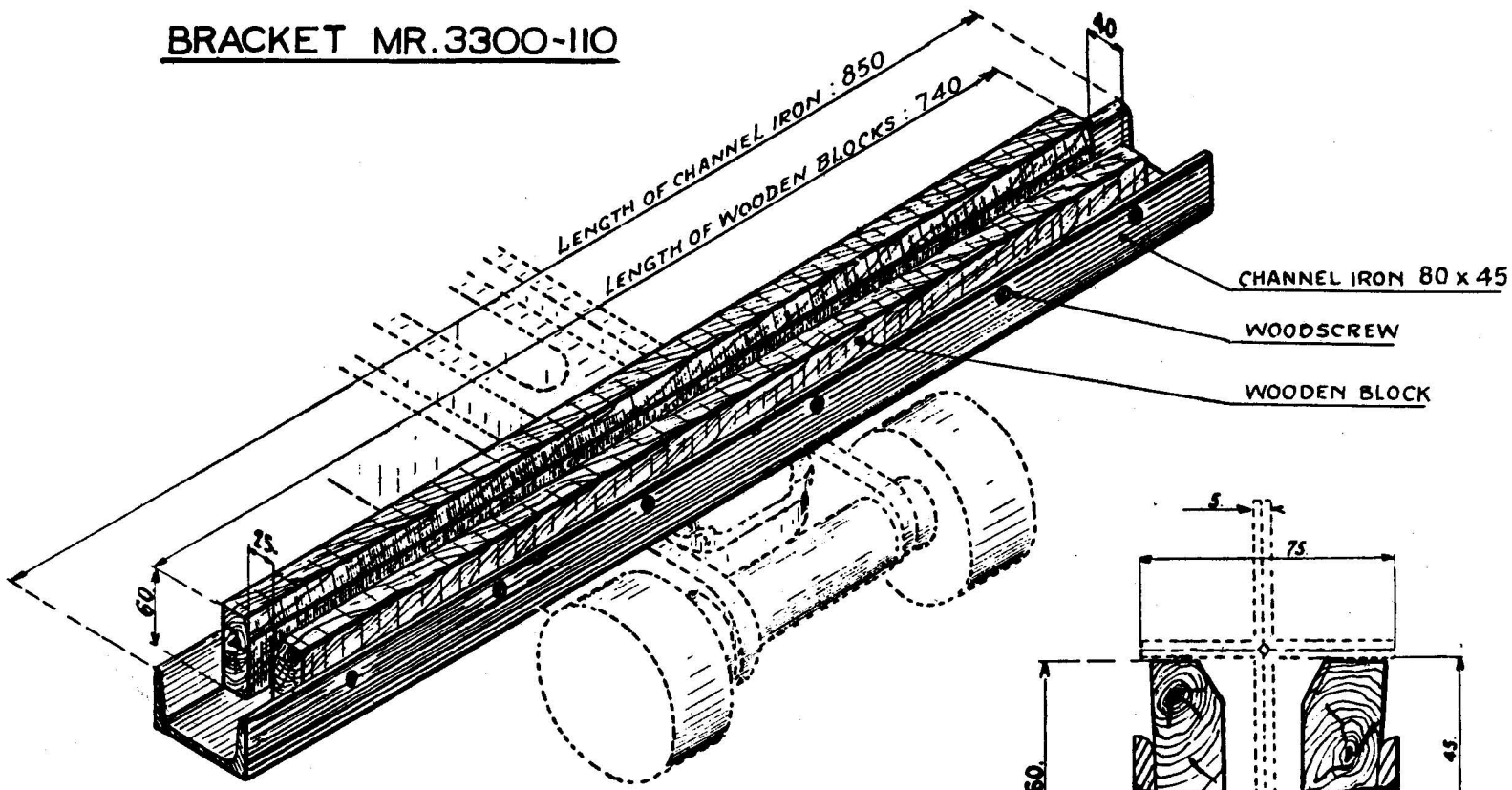

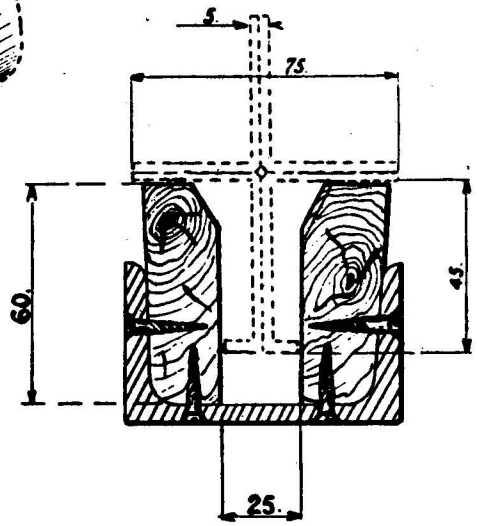

TO BE FITTED ON JACK HEAD

REAR AXLE

DISMANTLING EARLY TYPE AXLE

Fig.1. USE OF SPANNER.

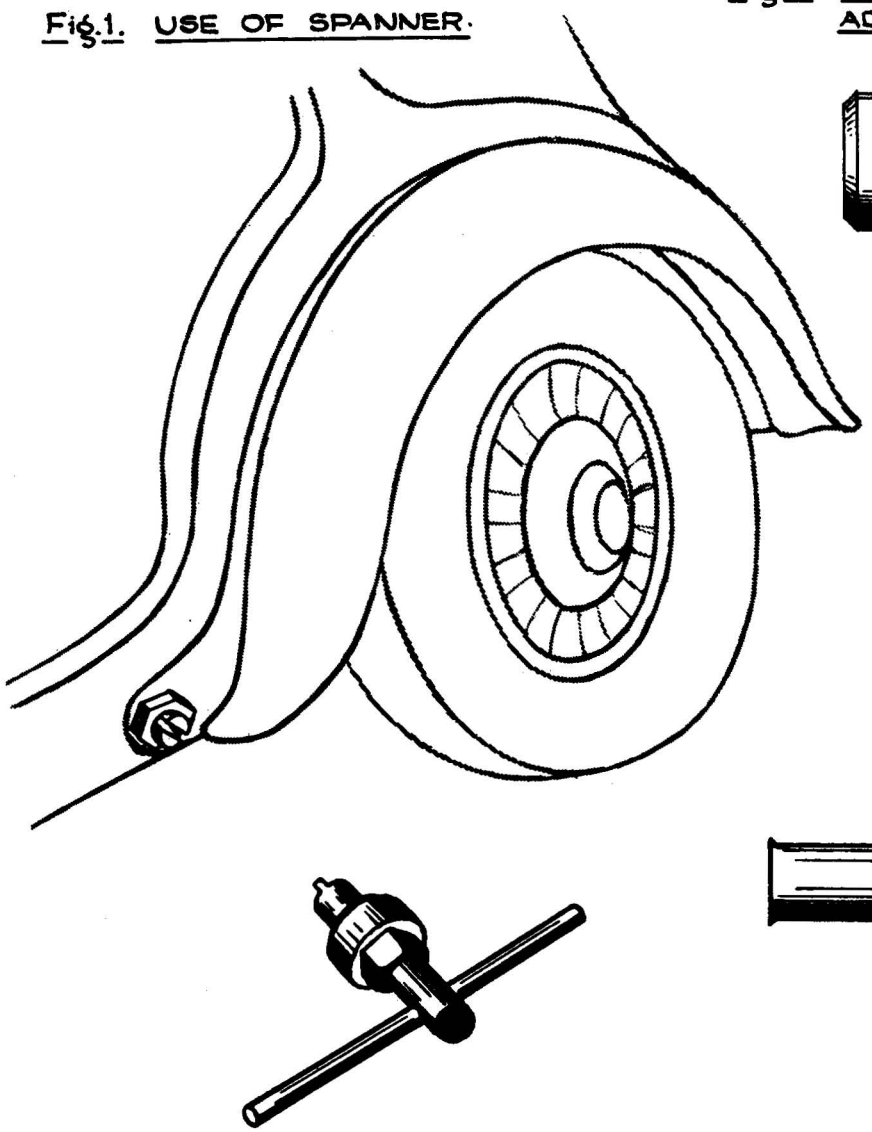

Fig.3. SPANNER FOR REAR HEIGHT ADJUSTMENT. 2304.T.

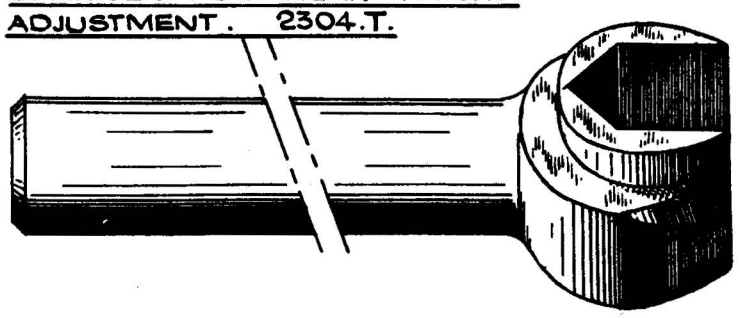

Fig.2. SPANNER 2050.T.

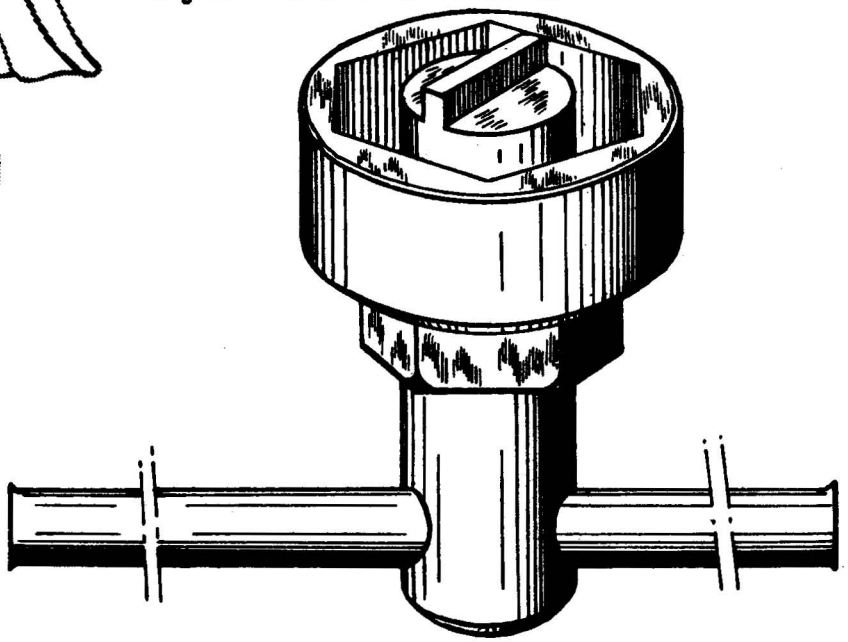

REAR AXLE

POSITIONING REAR AXLE

Fig. 1.

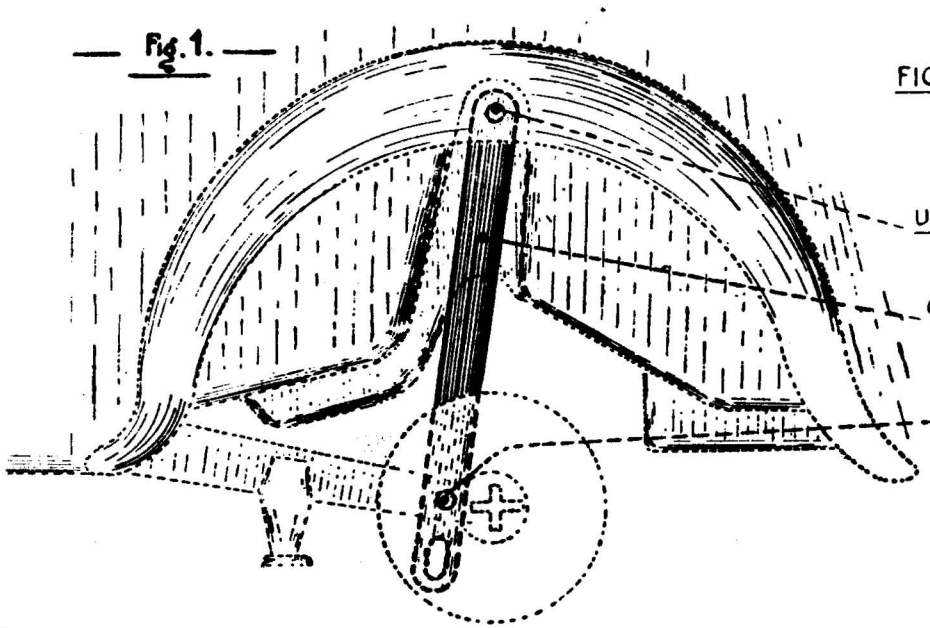

FIG. 1: ASSEMBLY SHOWING USE OF GAUGE

Fig. 2. GAUGE MR. 3338

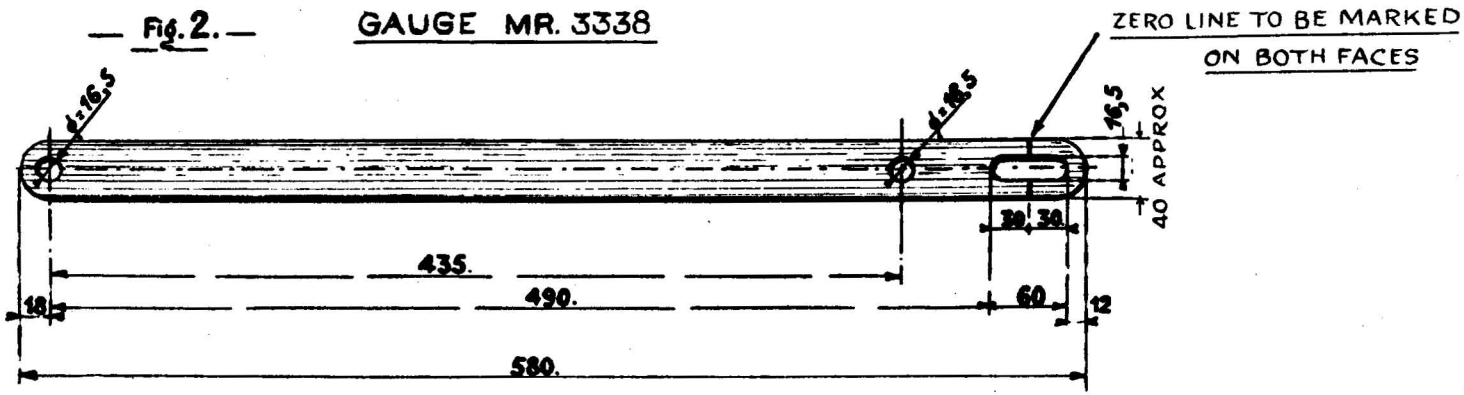

Thickness 6 to 10 mm.

REAR AXLE

ASSEMBLY: PLAN VIEW

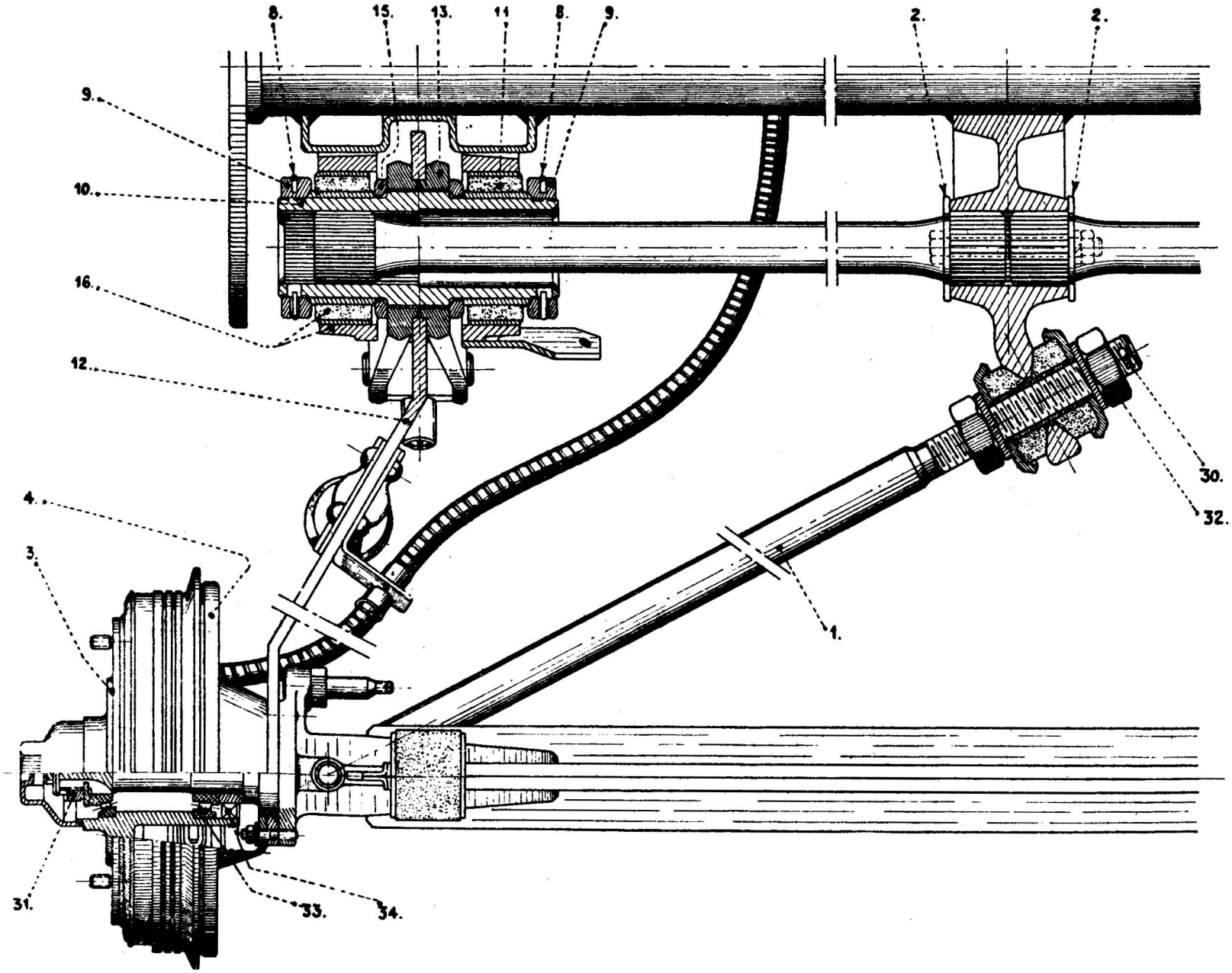

REAR AXLE

REMOVING TORSION BAR

ASSEMBLY SHOWING USE OF BLOCK

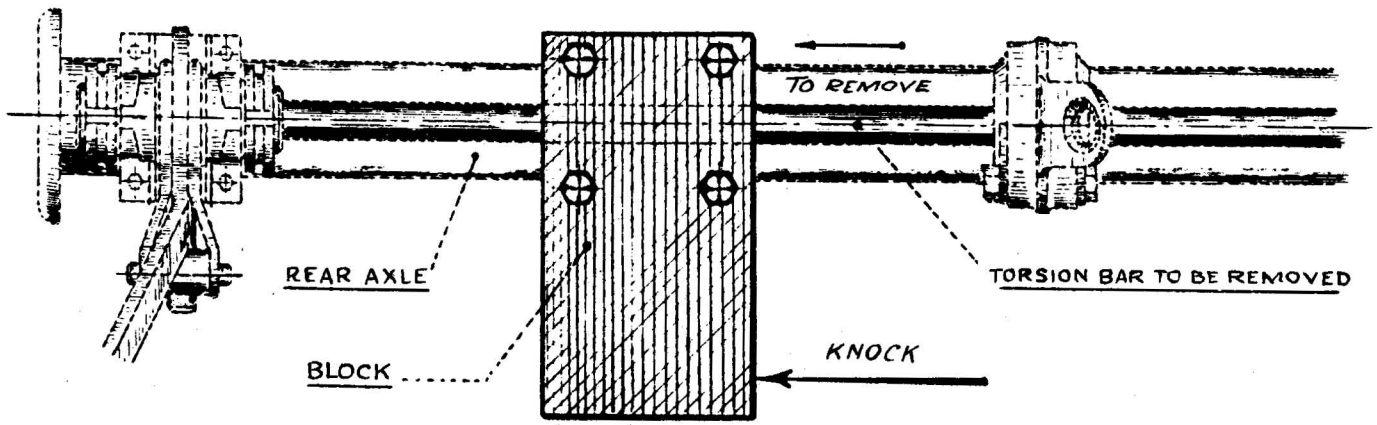

BLOCK MR.1578

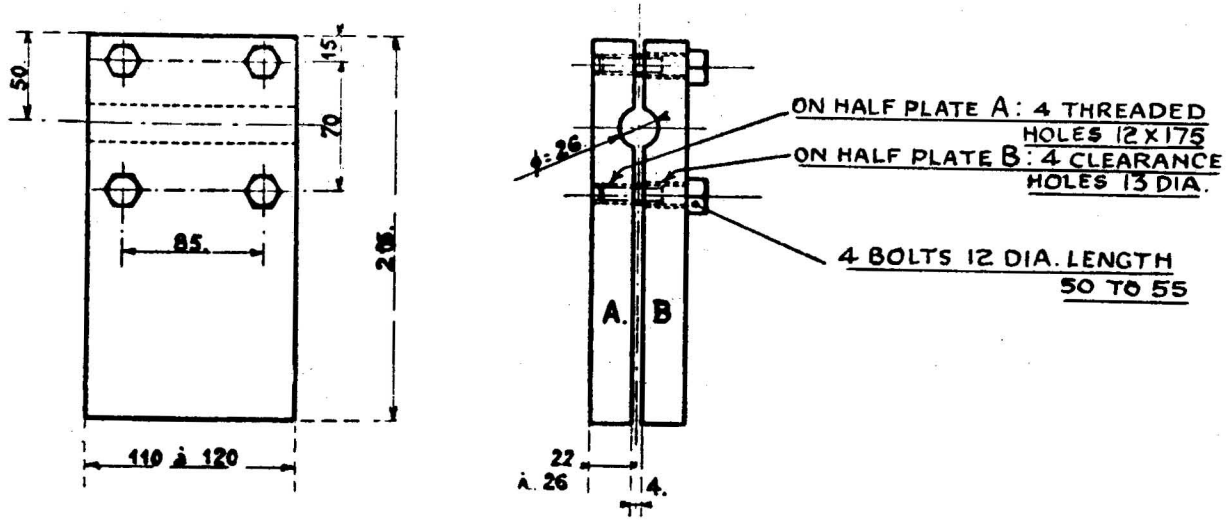

— REAR AXLE

— REAR LINK ARM —

Fig. 1.
ASSEMBLY OF REAR LINK ARM

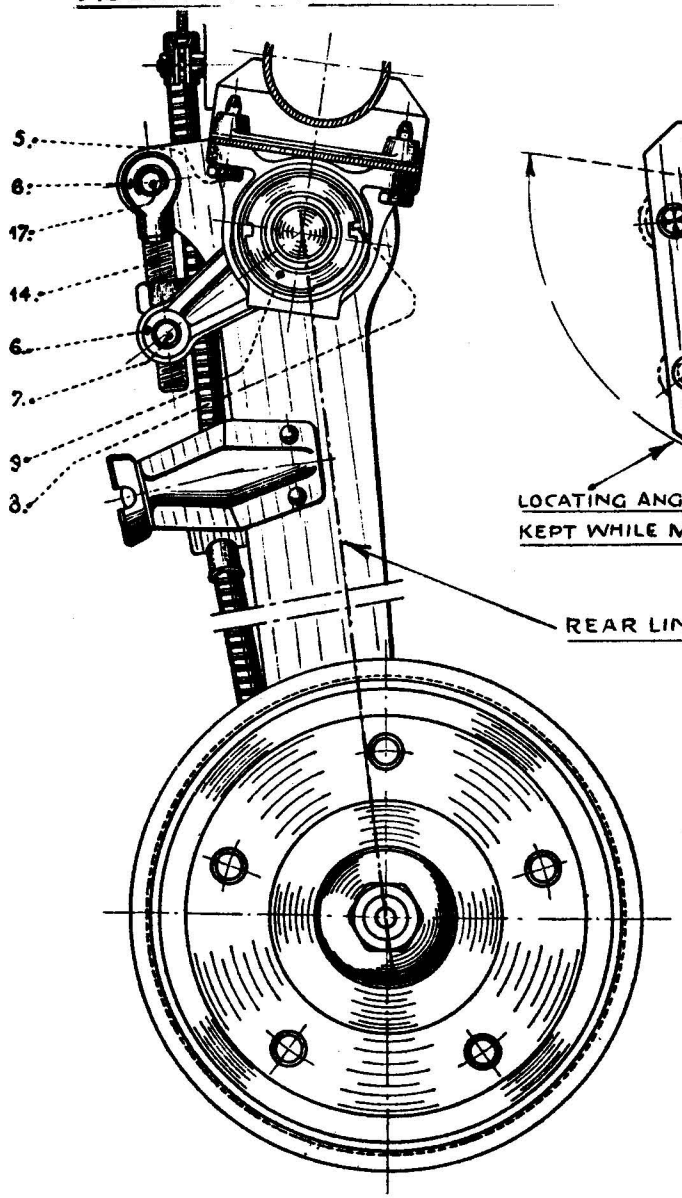

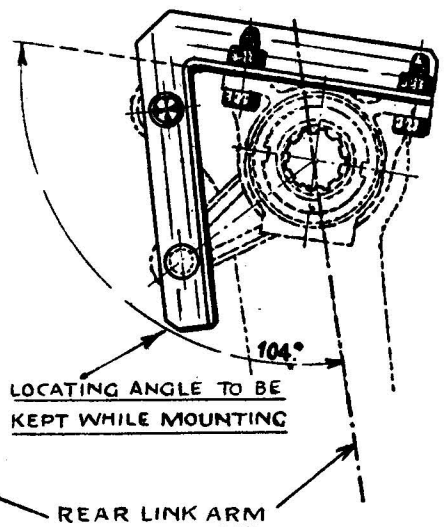

Fig. 2
HOLDING LINK ARM BRACKETS DURING ASSEMBLY

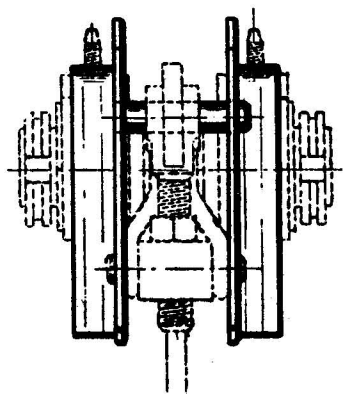

— Fig. 3 —
SET OF ANGLE PIECES MR. 3336

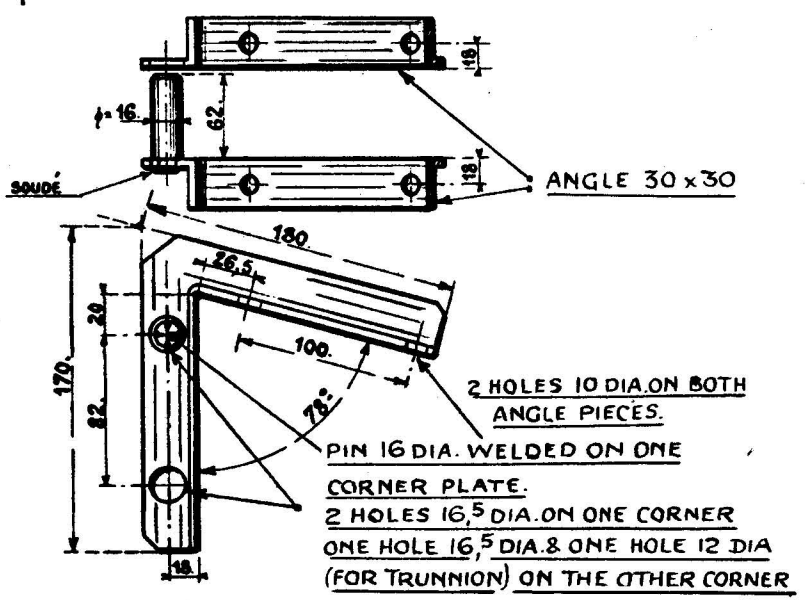

REAR AXLE

ASSEMBLY OF BRAKE BACK PLATE

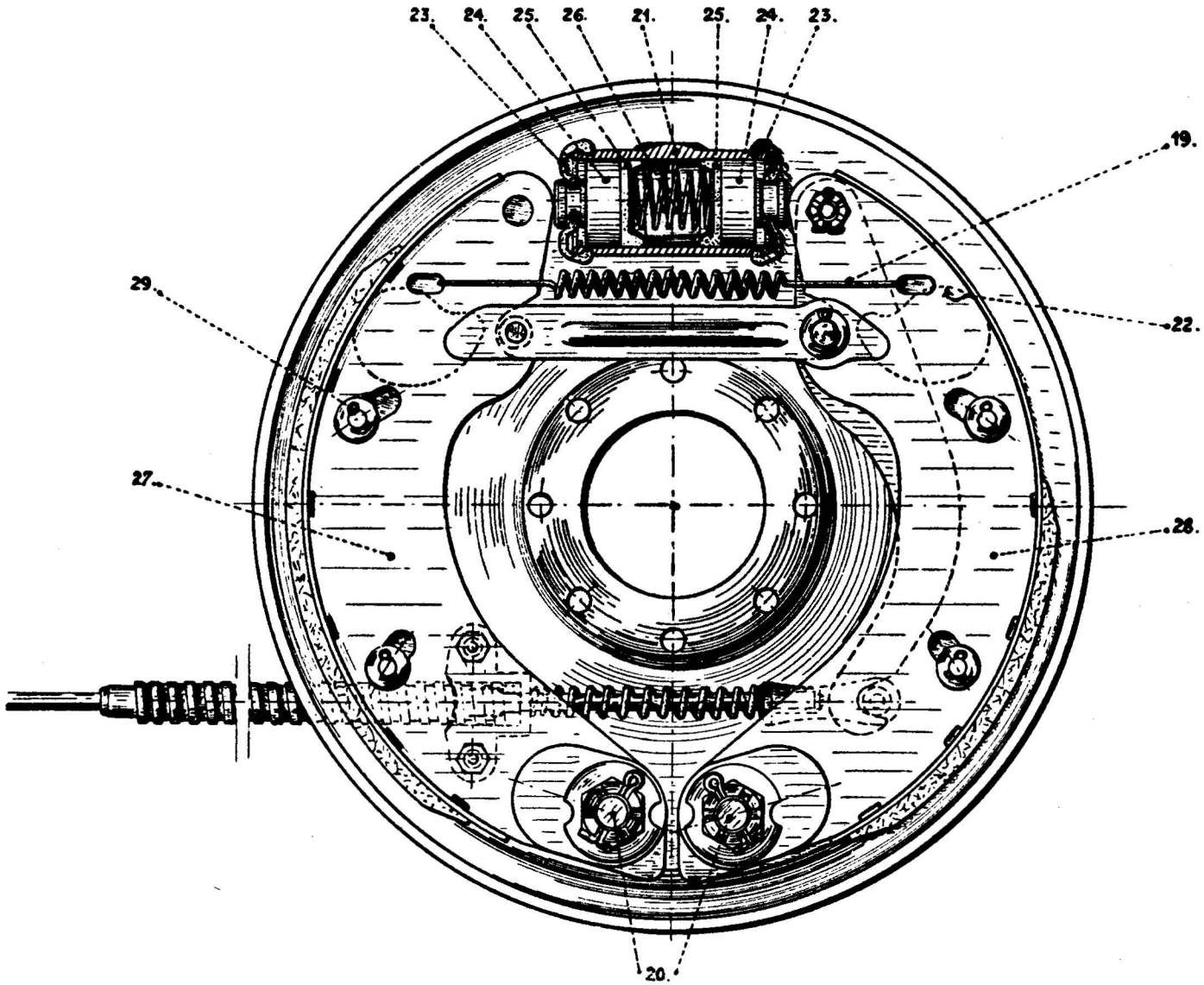

— CHECKING CAMBER AND TOE-IN OF REAR AXLE —

Fig. 1. CHECKING CAMBER.

CAMBER
ANGLE 1° TO 1°30' GIVING
7.3 TO 11.3 mm ON WHEEL
RIM DIAMETER.

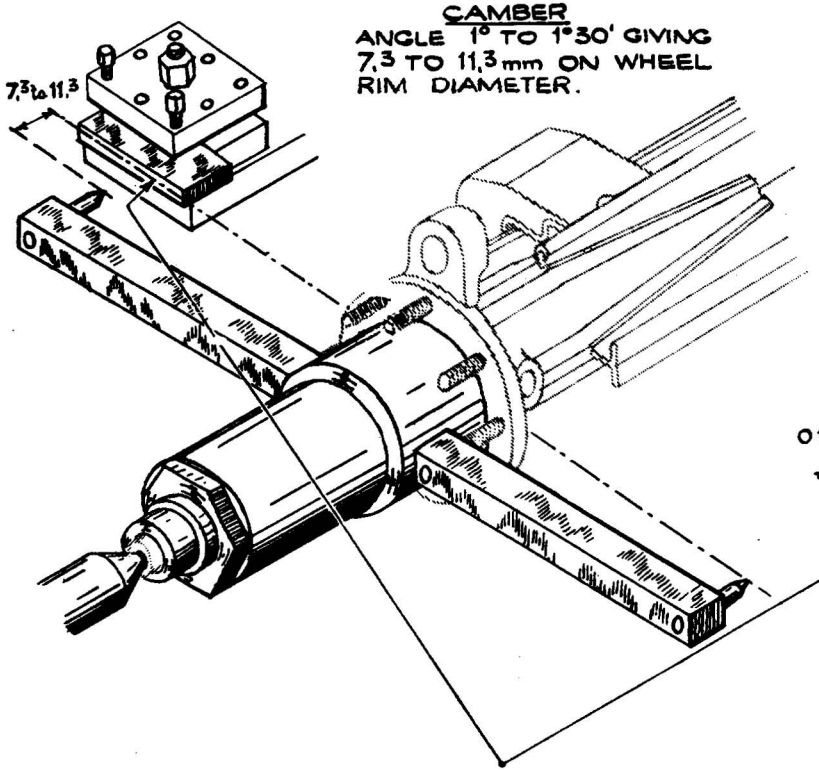

CHECKING GAUGE 2052.T.

Fig. 2. CHECKING TOE-IN.

TOE-IN
0° TO 0°15' GIVING
0 TO 2 mm ON WHEEL RIM
DIAMETER.

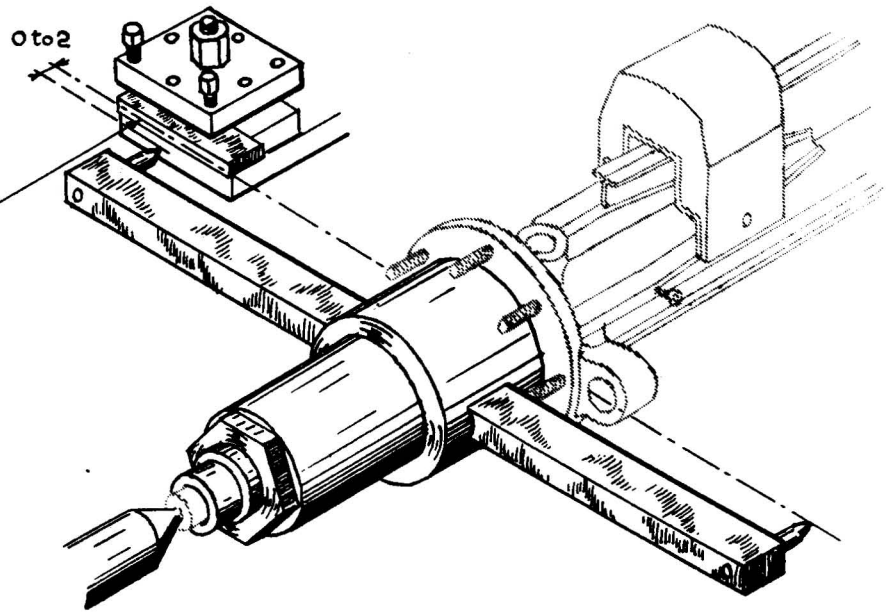

WORKING FACE OF GAUGE MUST BE PERFECTLY SQUARE TO CENTRE LINE OF LATHE.
ON STUB AXLES OF 30mm. DIAMETER A BUSH IS FITTED BETWEEN STUB AXLES AND GAUGE BODY.

REAR AXLE

CHECKING CAMBER AND TOE IN OF REAR AXLE

TOOL. 2052.T.

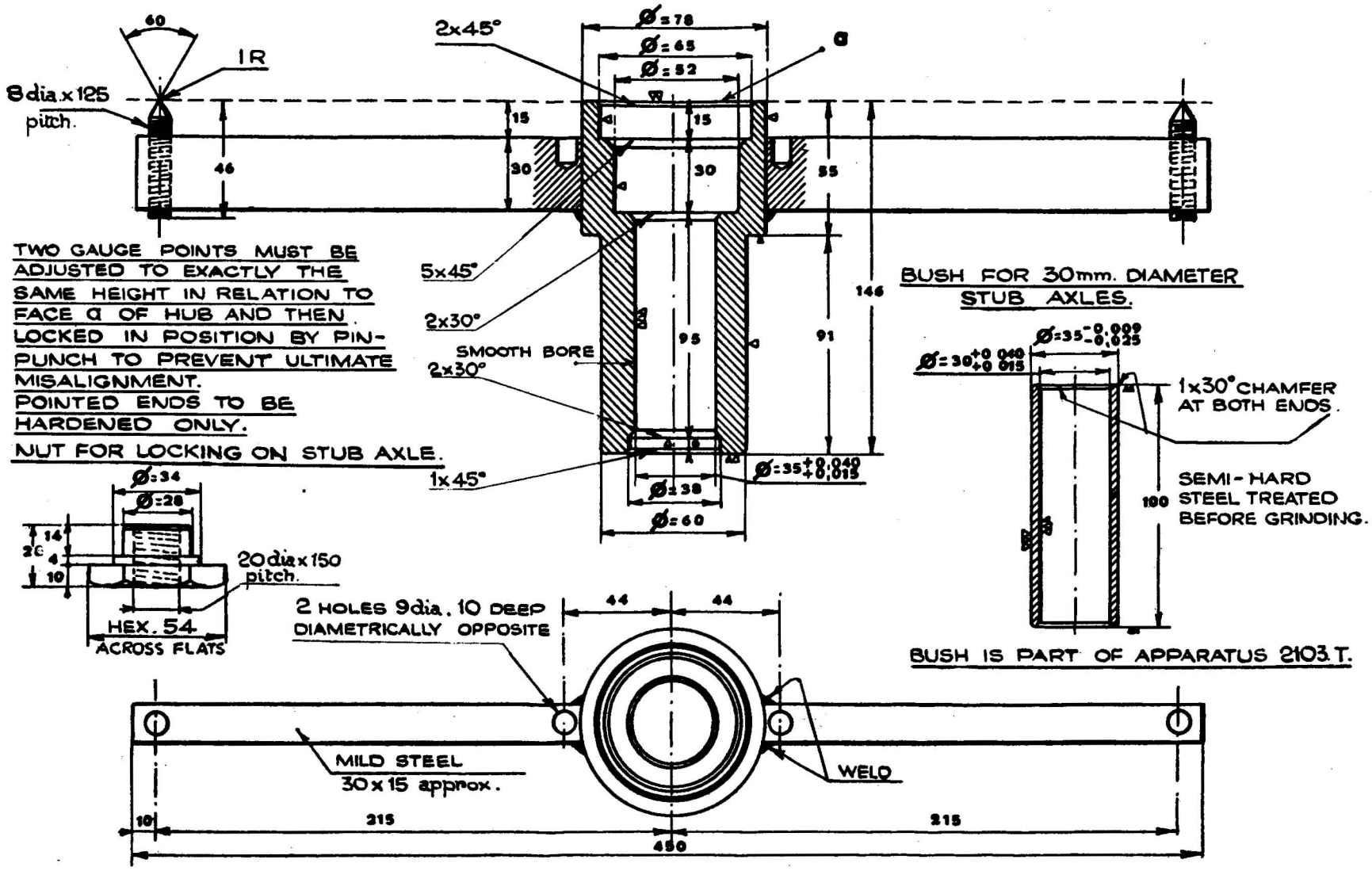

— REAR AXLE —

— RECTIFICATION OF BRAKE DRUMS —

ASSEMBLY SHOWING USE OF MANDREL

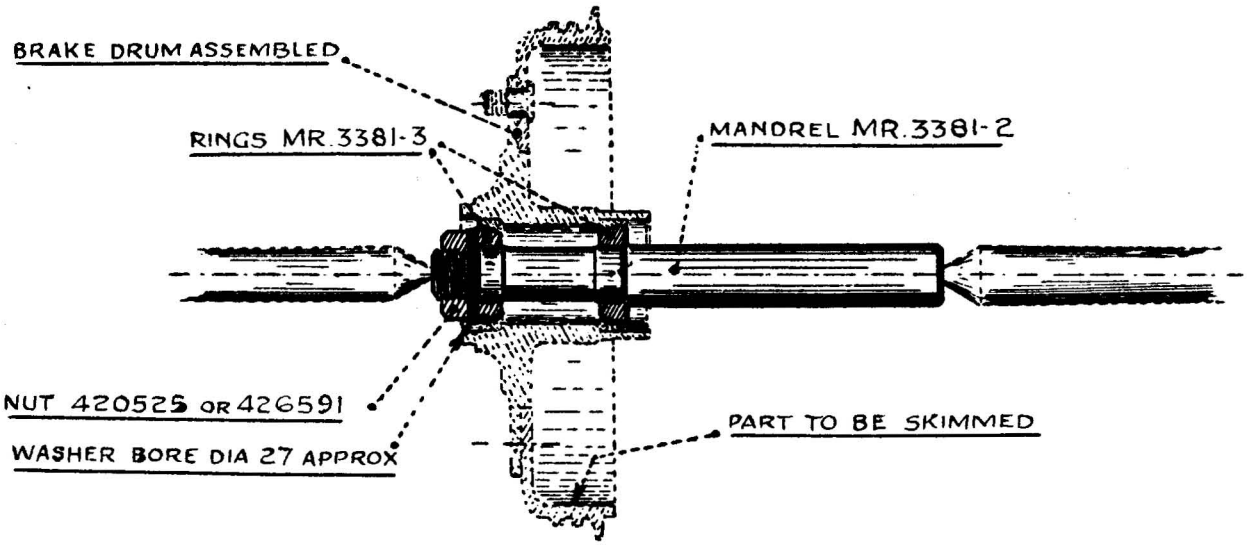

RINGS MR.3381-3 (2 pieces)

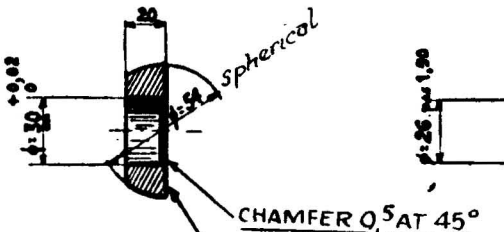

MANDREL MR.3381-2

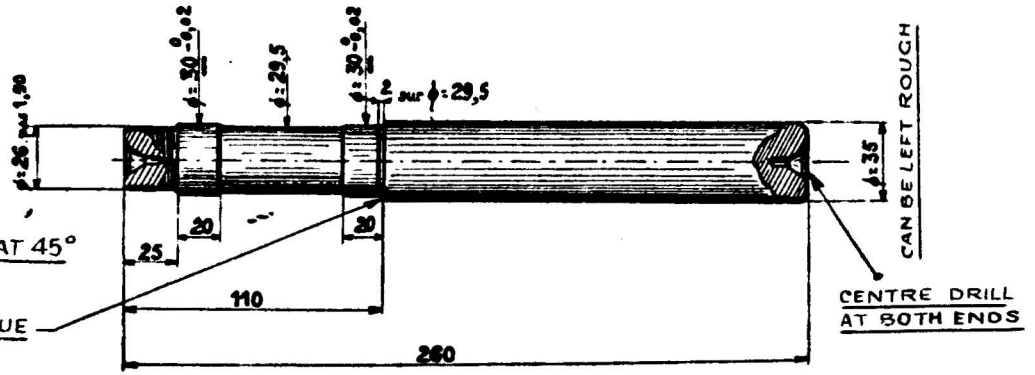

DISMANTLING AND ASSEMBLING SILENTBLOCS OF SUPPORT BRACKETS

ASSEMBLY SHOWING SILENTBLOCK BEING PUT IN POSITION

ASSEMBLY SHOWING SILENTBLOCK IN POSITION

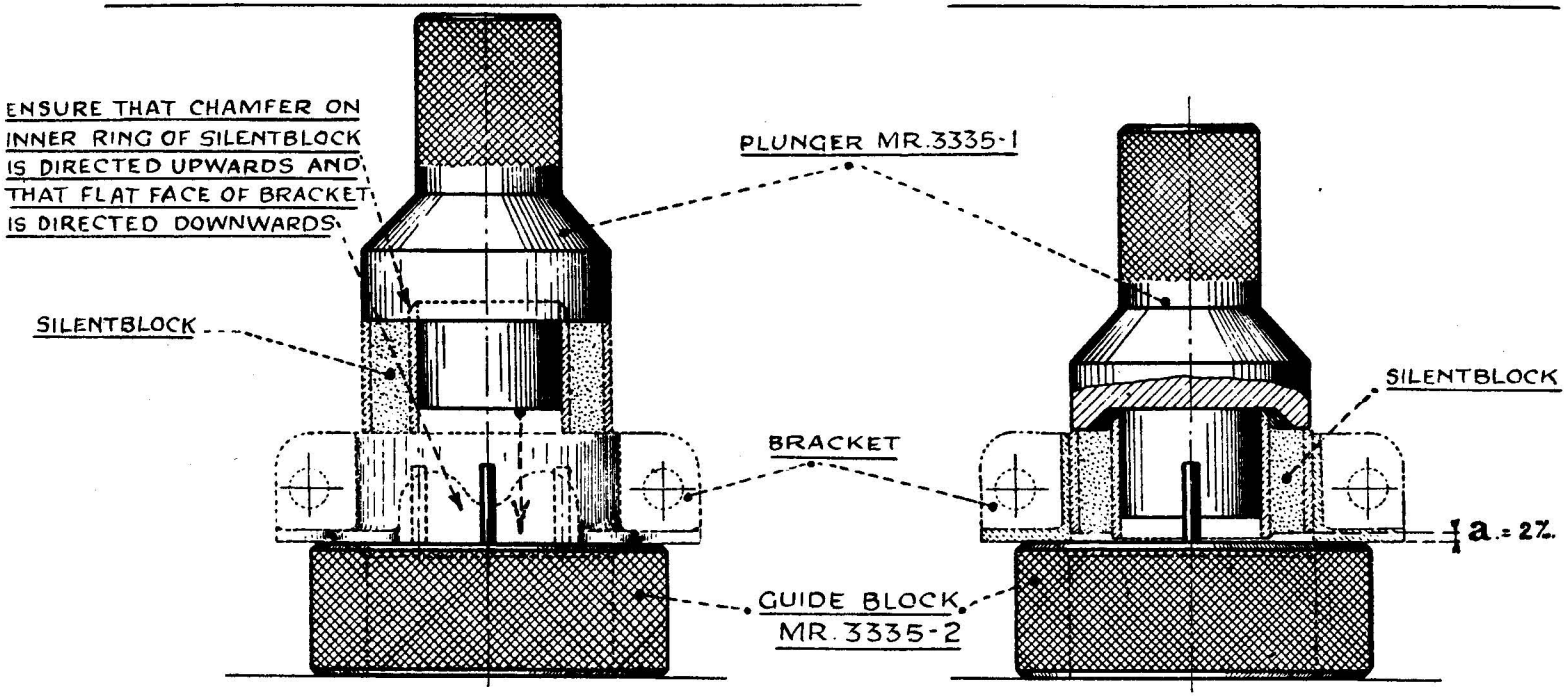

DETAILS OF PLUNGER MR.3335-1

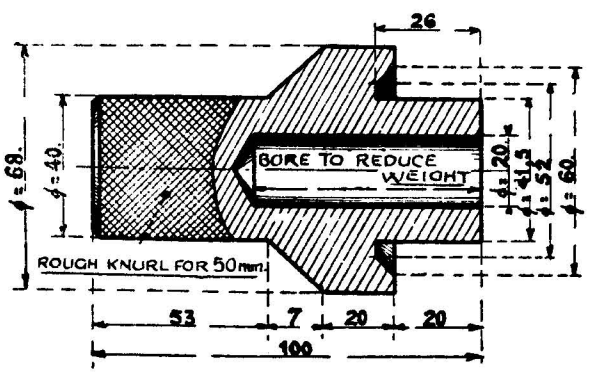

DETAILS OF GUIDE BLOCK MR.3335-2

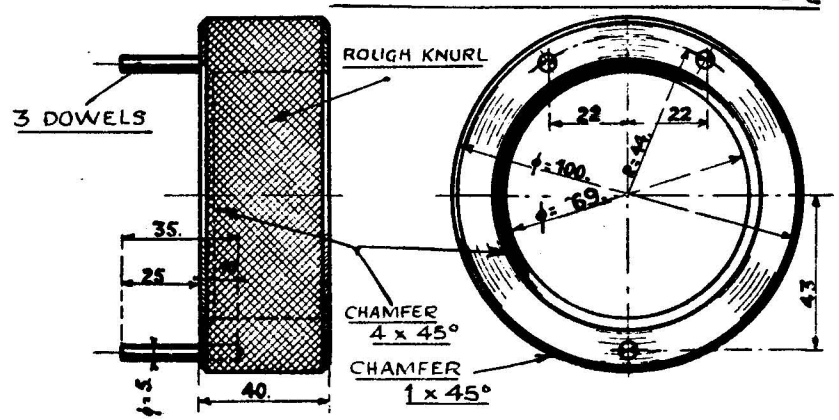

REAR AXLE

SETTING REAR LINK ARM IN RELATION WITH FLANGE OF REAR CROSSMEMBER WHEN ADJUSTING TORSION BARS

ASSEMBLY SHOWING ANGLE OF ARM AND FLANGE

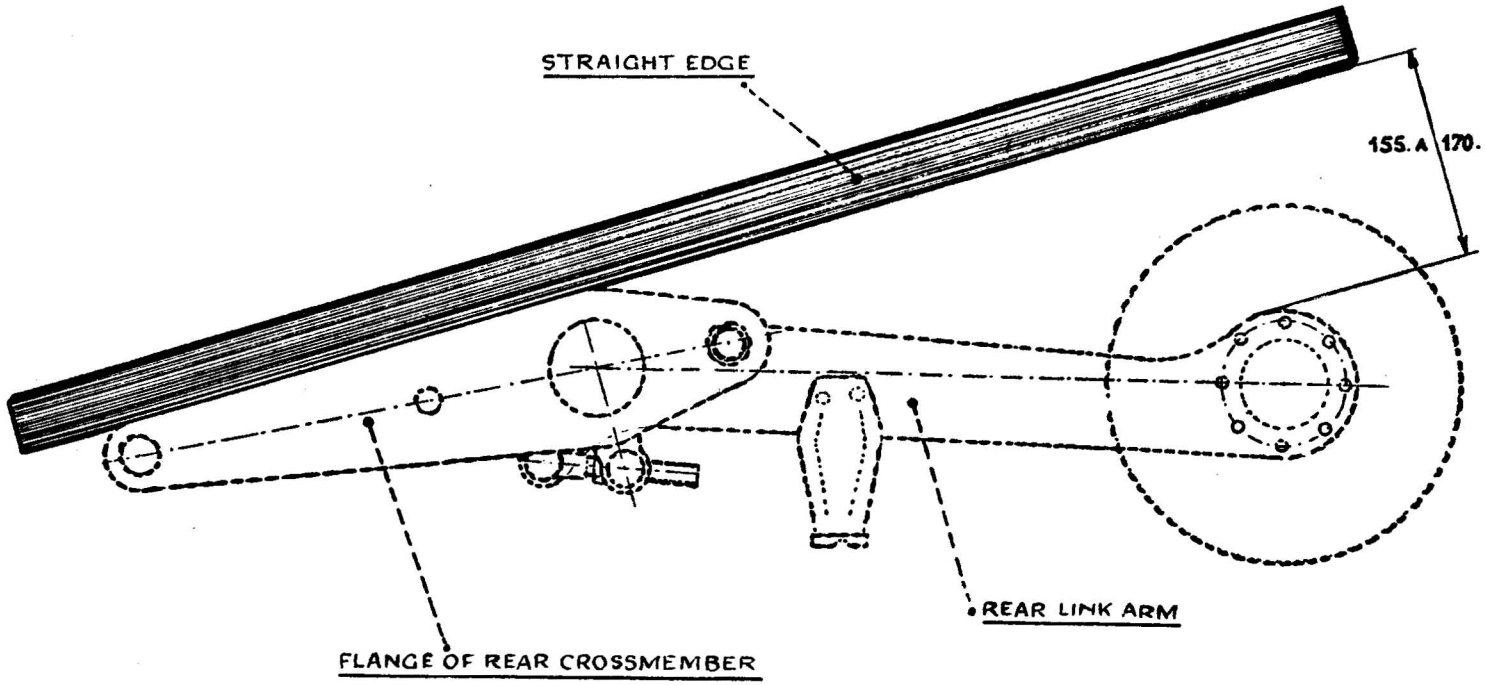

REAR AXLE

CHECKING LATERAL ADJUSTMENT OF AXLE

USE OF GAUGE

WITH GAUGE APPLIED AGAINST HUB AS SHOWN, CIRCULAR MARKING "a" OF MOVING PIN "b" COMES OPPOSITE ONE OF THE DIVISIONS OF THE SCALE GRADUATED ON GUIDE "d"
Note figure indicated.
APPLY GAUGE TO OPPOSITE HUB.
CIRCULAR MARKING (if axle is in correct adjustment) SHOULD COME OPPOSITE SAME DIVISION AS INDICATED ABOVE.
IF READINGS DIFFER (axle out of line) READJUST TIE-BAR TO BRING AXLE INTO CORRECT ADJUSTMENT.

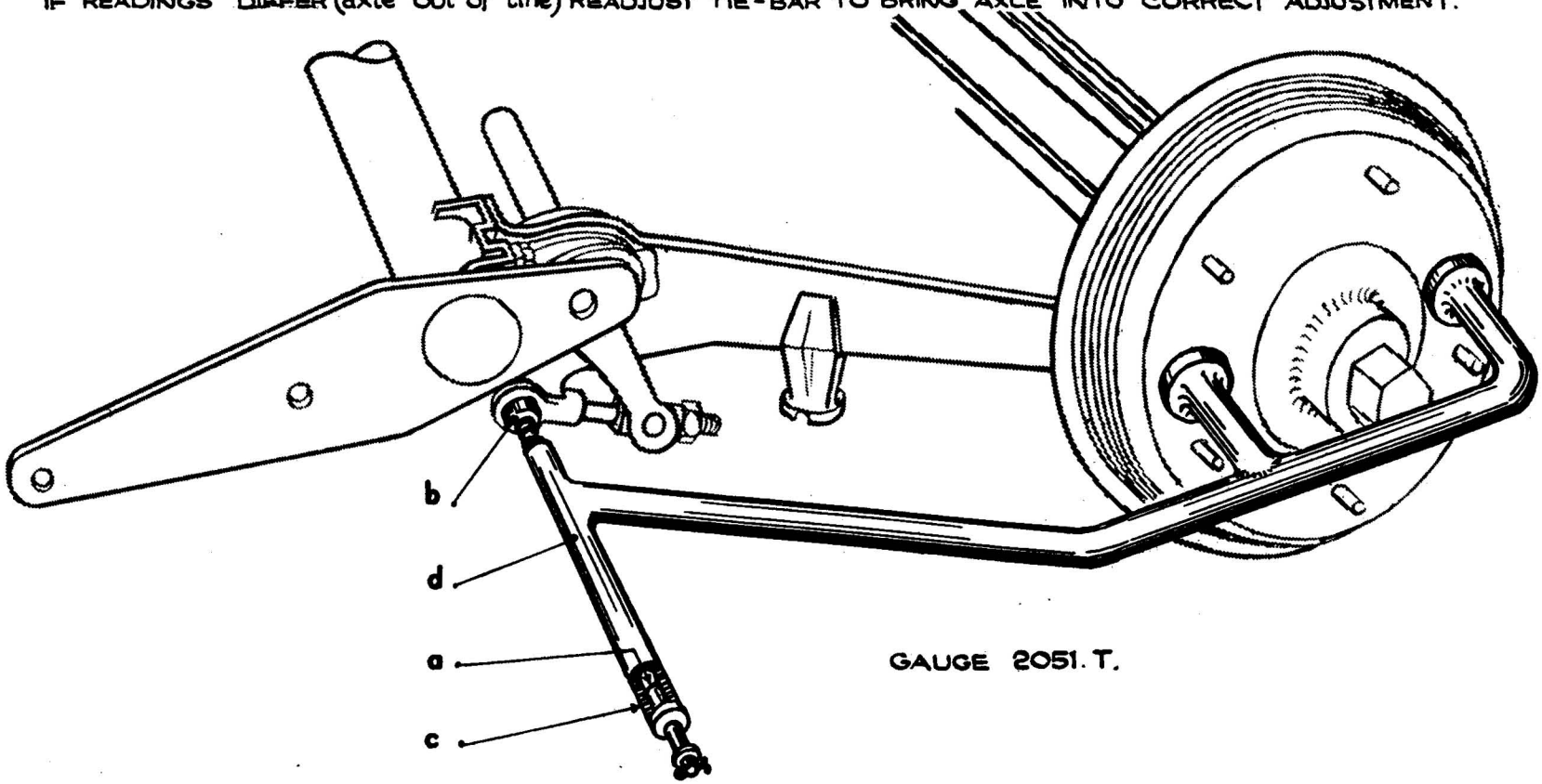

GAUGE 2051. T.

REAR AXLE

CHECKING CONCENTRICITY OF BRAKE LININGS

APPARATUS 2103-T

— Fig. 1. —

REGISTERING DIA. OF DRUM

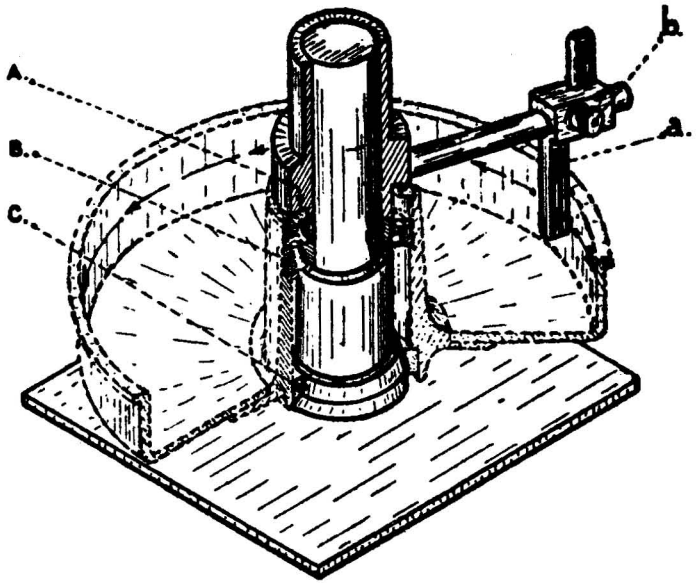

— Fig. 2. —

CHECKING CONCENTRICITY OF LININGS

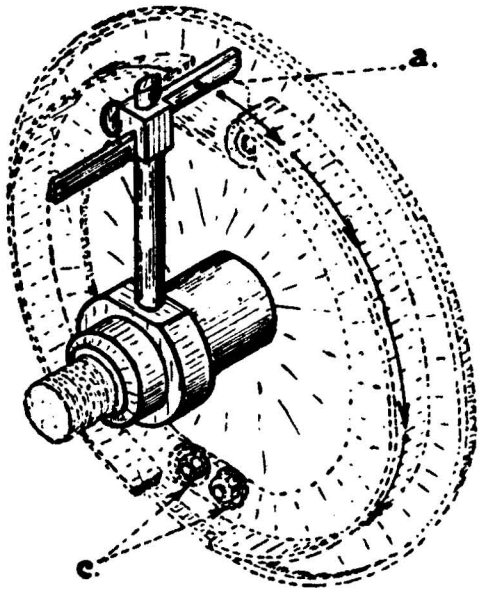

BRAKE DRUM EQUIPPED WITH S.P.I. OIL RETAINER WITH COMPLETE INNER TIMKEN BALL-RACE B, AND WITH OUTER TIMKEN BALL-RACE C.

- PLACE DRUM ON PIVOT
- PLACE INDICATOR RING ON PIVOT
- BRING INDICATOR a, IN CONTACT WITH DRUM, AND DESCRIBE A COMPLETE CIRCLE.
- LOCK INDICATOR AT SET POSITION WITH THUMBSCREW b.

- FIT INSTRUMENT ON STUB
PLACE INDICATOR a, AS SET PREVIOUSLY, ON LININGS; INDICATOR MUST REMAIN IN CONTACT THROUGHOUT CIRCUMFERENCE. *(IN ORDER TO OBTAIN THIS RESULT, ADJUST LININGS BY ECCENTRIC BUSHES, C AND ADJUSTING CAMS AT REAR OF BRAKE PLATE, NOT SHOWN)*
REMOVE BURRS ON LININGS WITH RASP.

AFTER CHECK RELEASE CAMS TO ALLOW FITTING OF DRUM (FOR FINAL ADJUSTMENT OF CAMS SEE Nº 150, PARA. 2)

SUSPENSION

REFILLING SPICER SHOCK ABSORBER

Fig.1. USE OF APPARATUS.

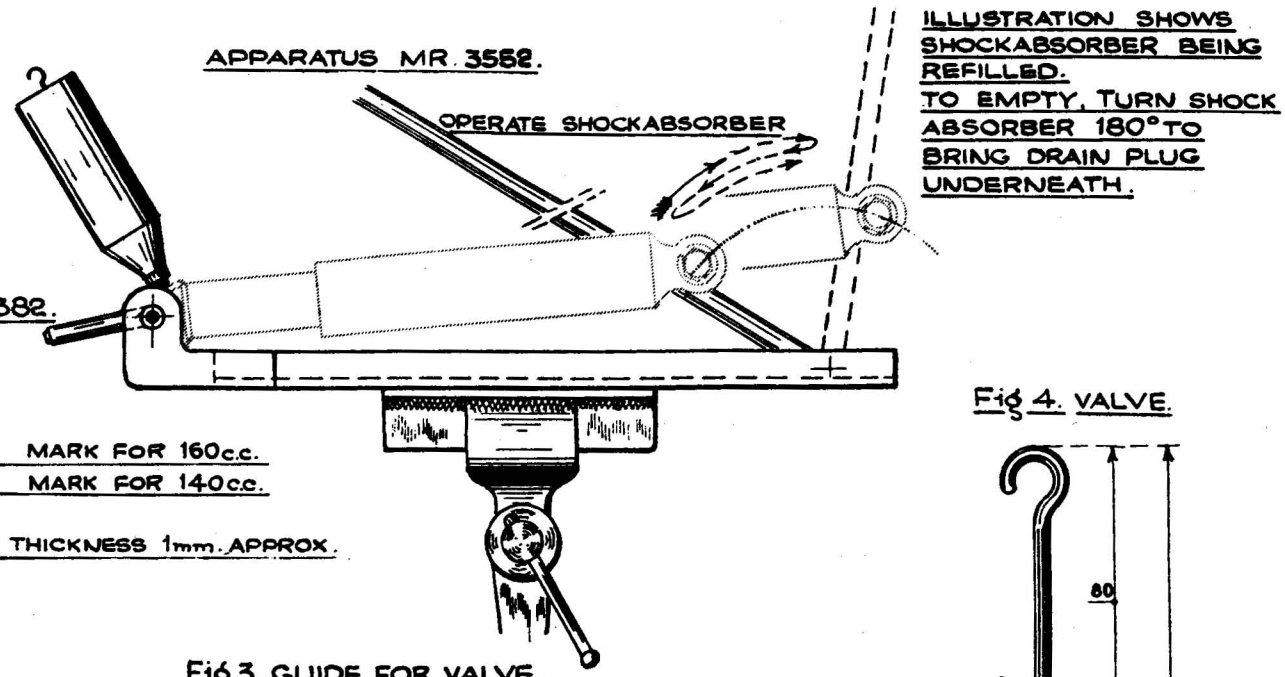

Fig 2. FUNNEL MR.3382.

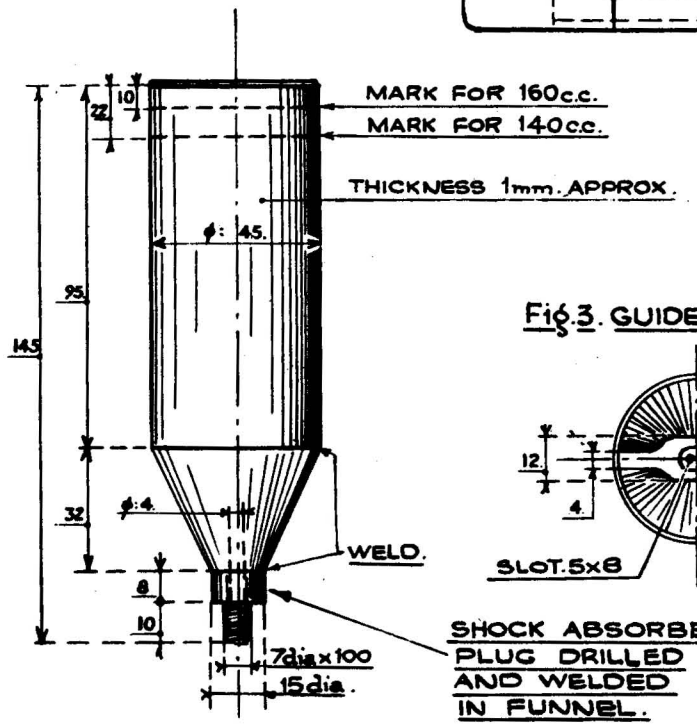

Fig.3. GUIDE FOR VALVE.

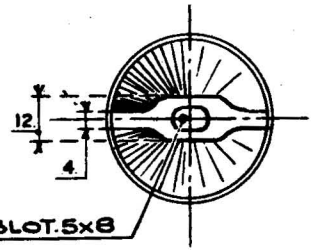

Fig 4. VALVE.

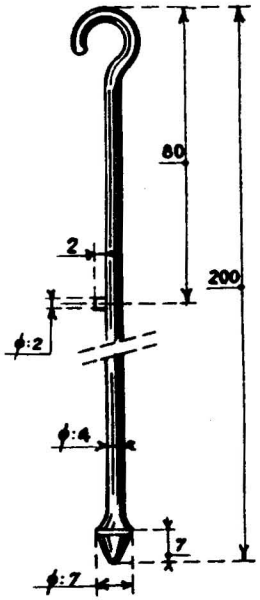

SUSPENSION

REFILLING SPICER SHOCK ABSORBERS

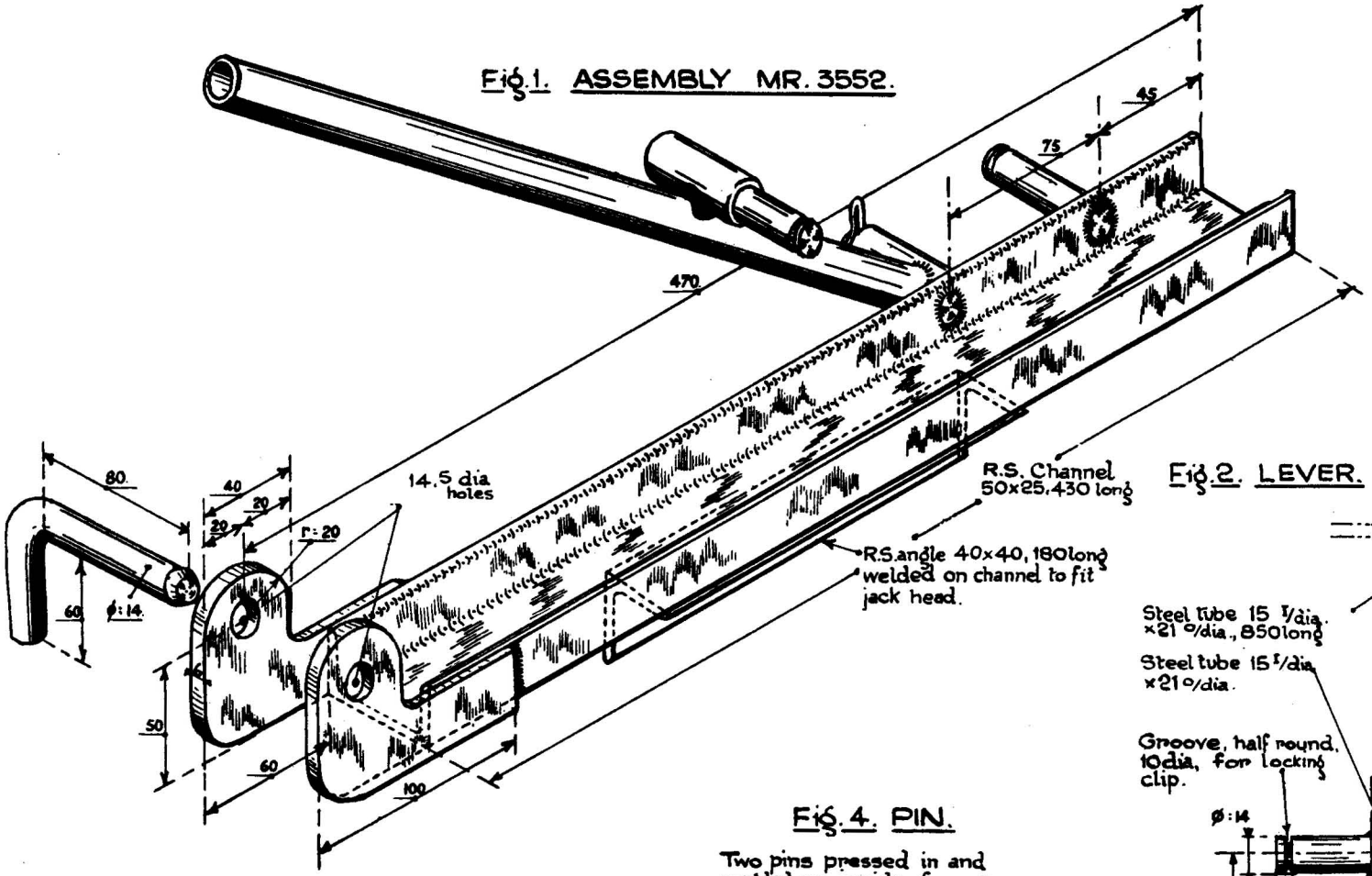

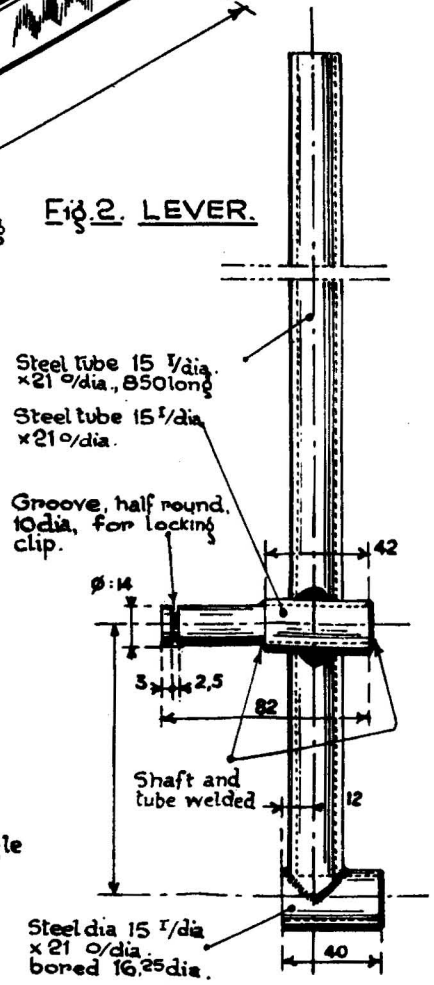

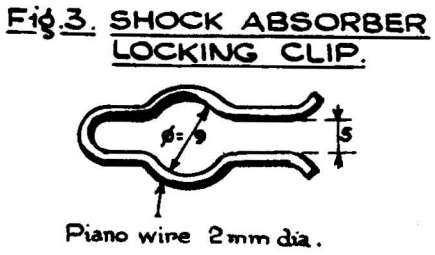

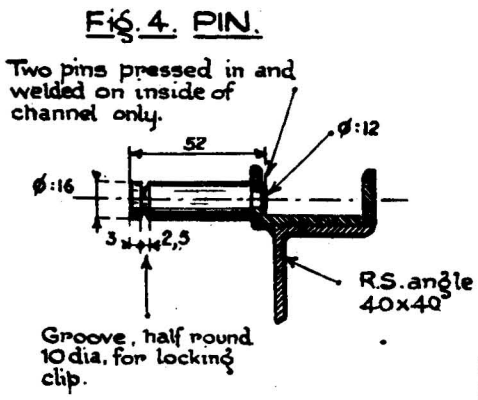

GEAR CHANGE ASSEMBLY

SELECTOR ASSEMBLY

FIG. 1 PLAN VIEW

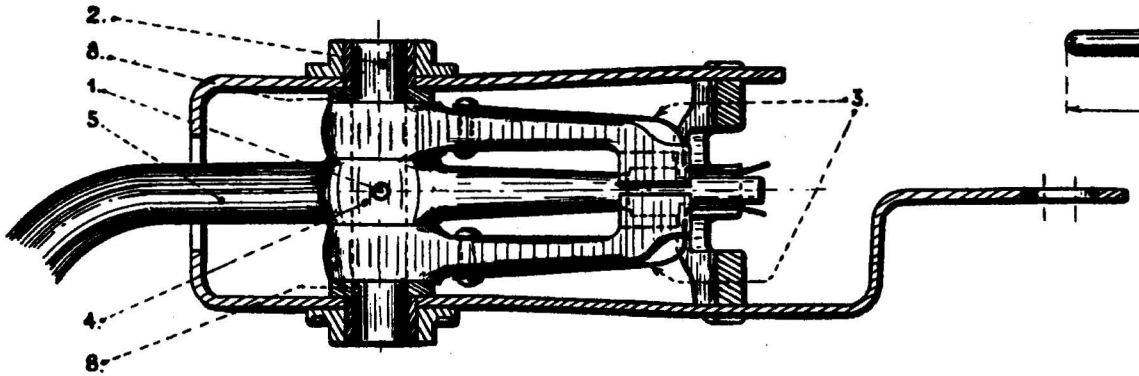

Fig 2 SIDE VIEW

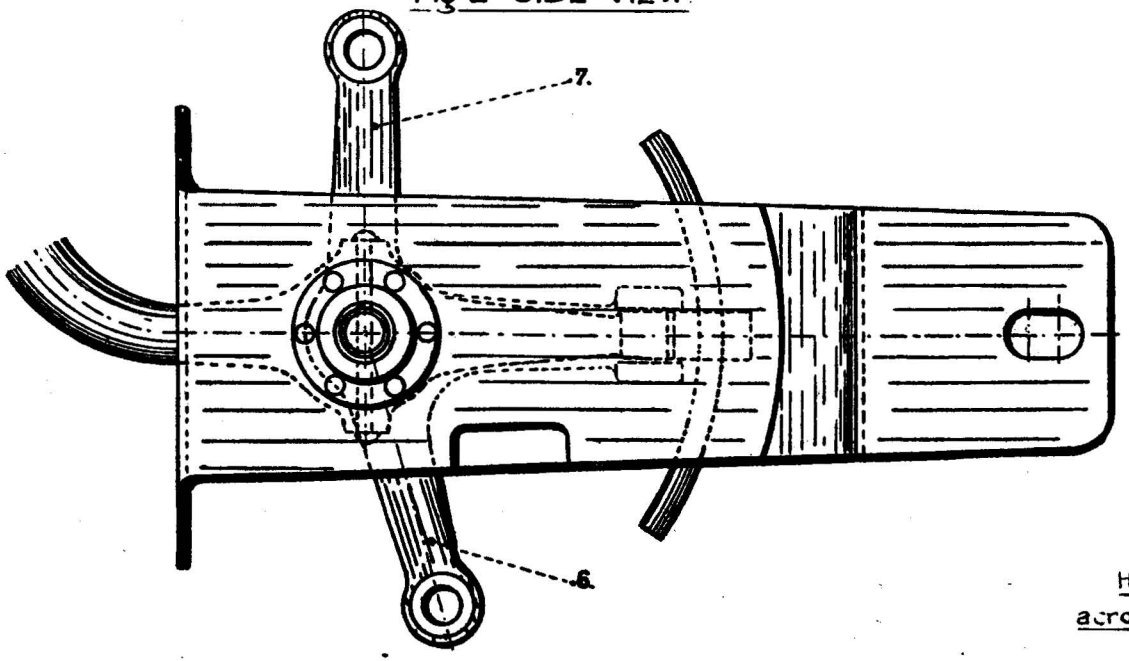

FIG. 3 - SPANNER 2430-T

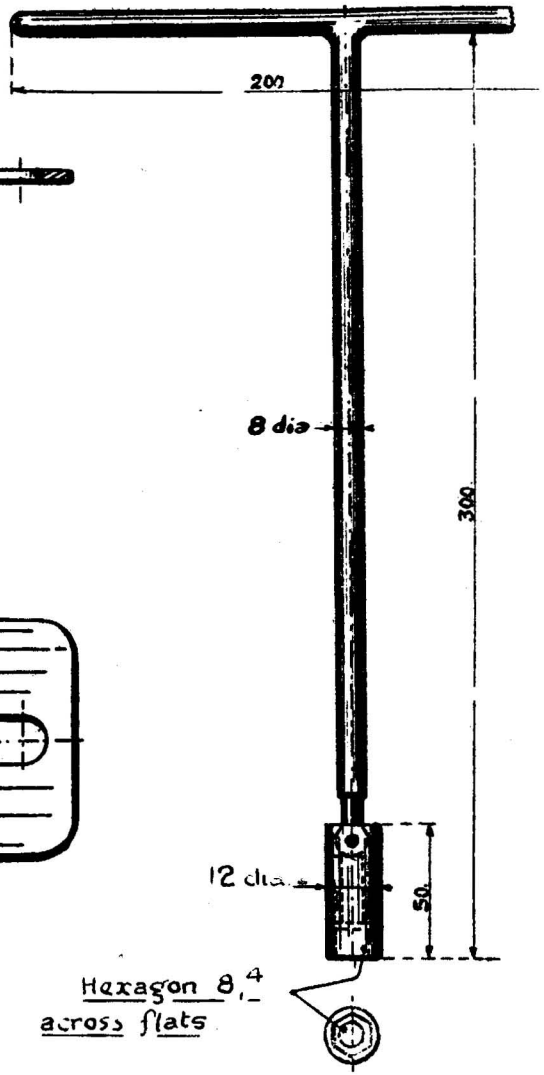

— REMOVING AND FITTING MASTER CYLINDER —

Fig. 1. HANDLE 2131.T.

Fig. 2. SPANNER 2130.T.

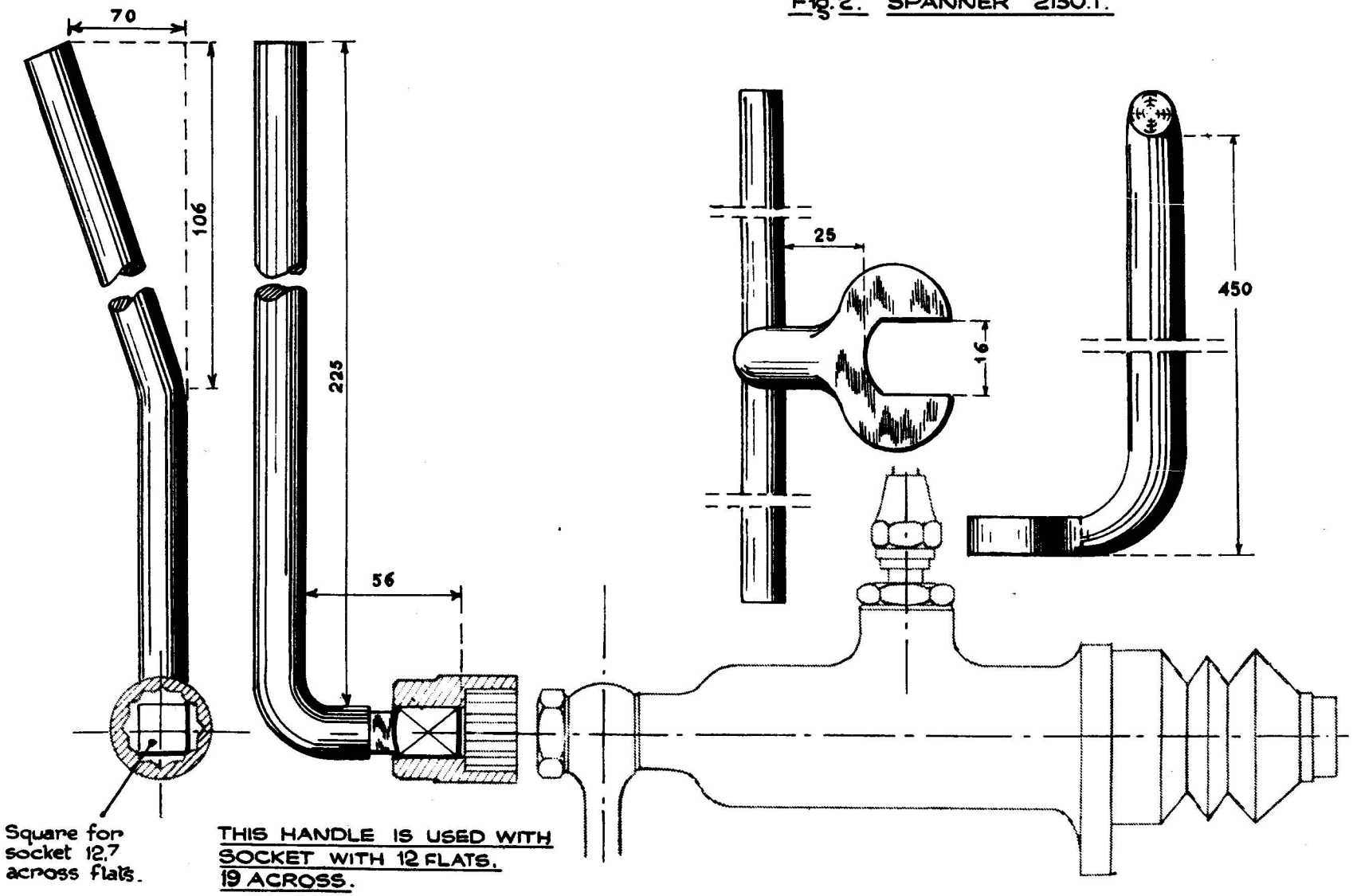

— MASTER CYLINDER ASSEMBLY —

SECTION ON LONGITUDINAL CENTRE LINE.

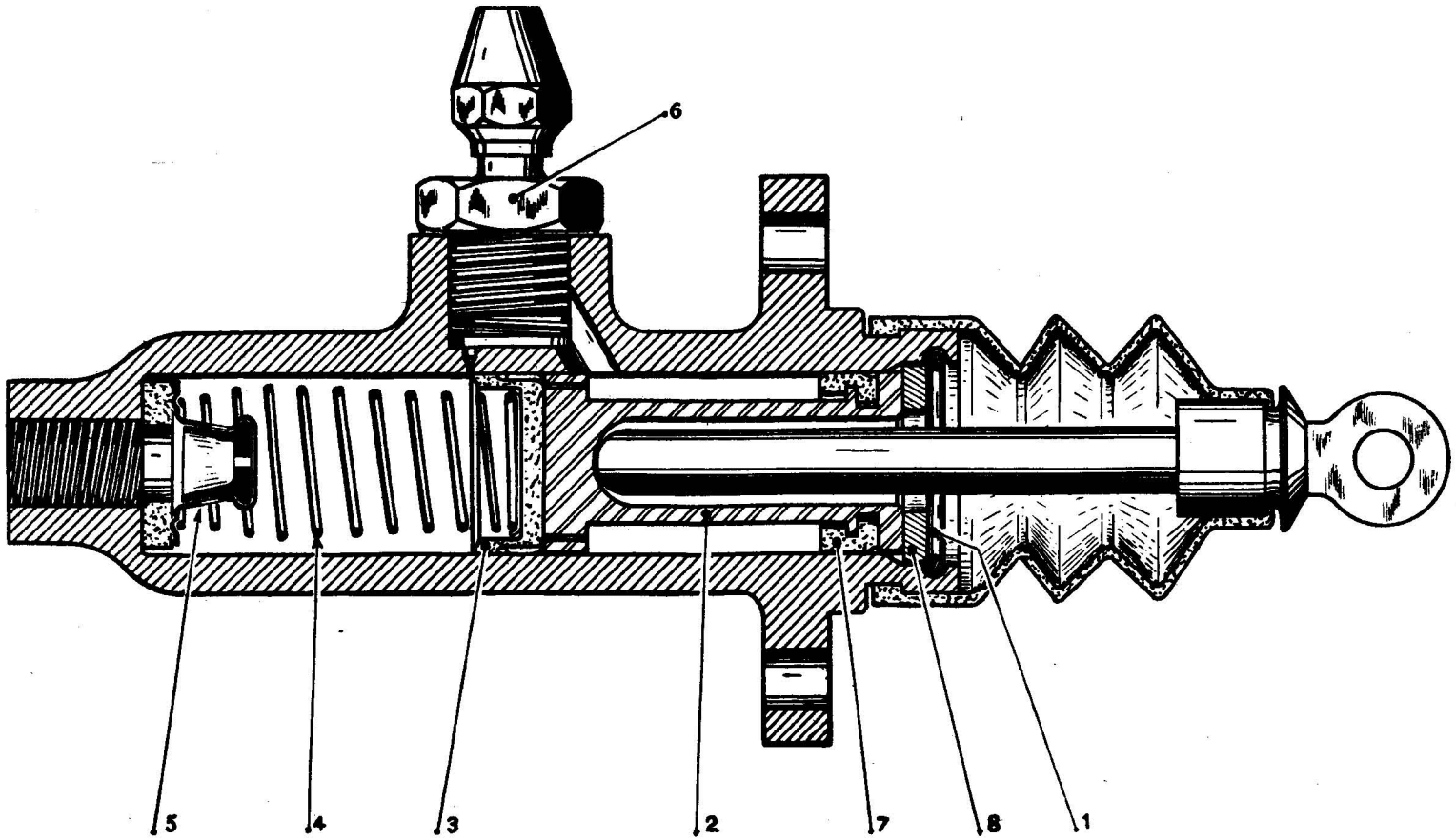

— ELECTRICAL EQUIPMENT —

— AUTOMATIC ADVANCE IGNITION CURVES —

CURVE FOR SUCTION CONTROL

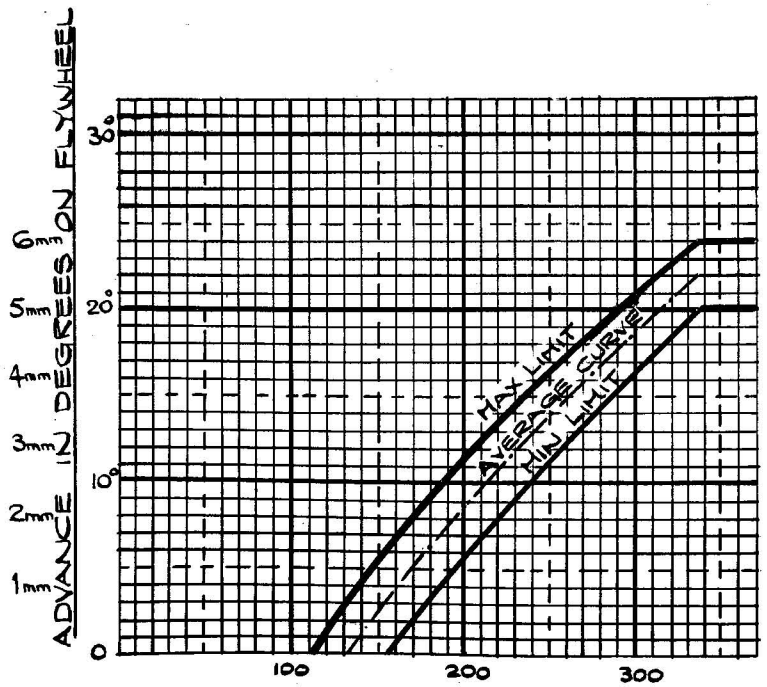

CURVE FOR DISTRIBUTOR

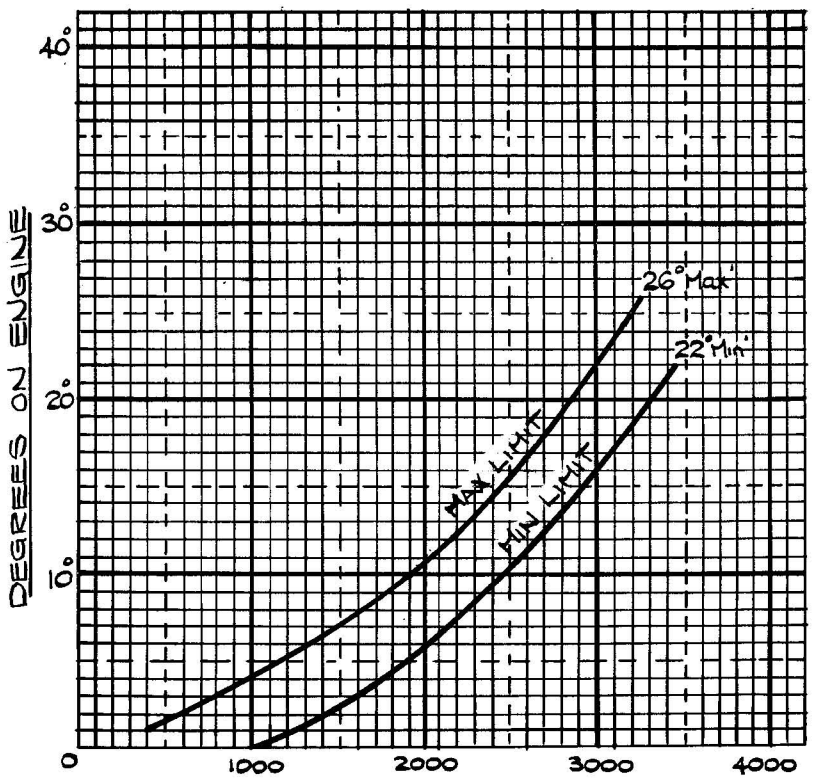

ELECTRICAL EQUIPMENT

DYNAMO ASSEMBLY

LONGITUDINAL SECTION ON CENTRE LINE.

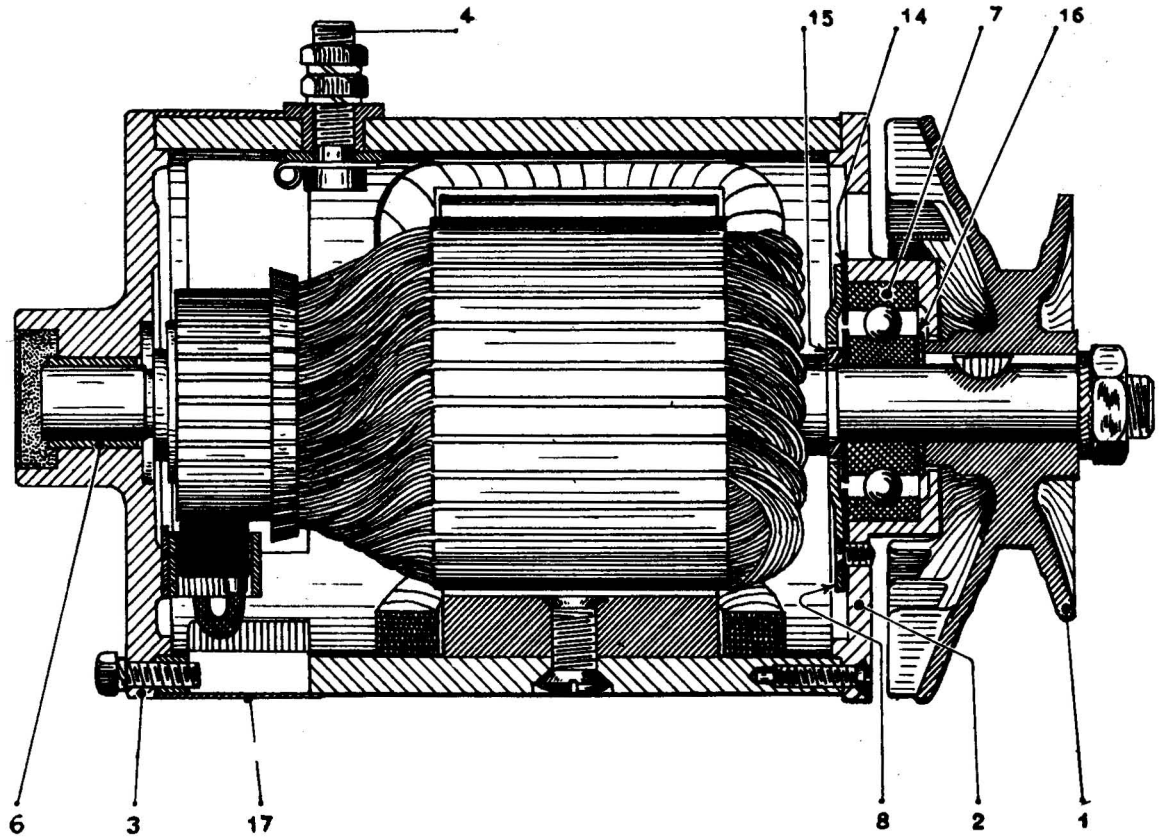

ELECTRICAL EQUIPMENT

DYNAMO ASSEMBLY

END VIEWS

Fig. 1. INDUCTION COILS
View from opposite side to brushes

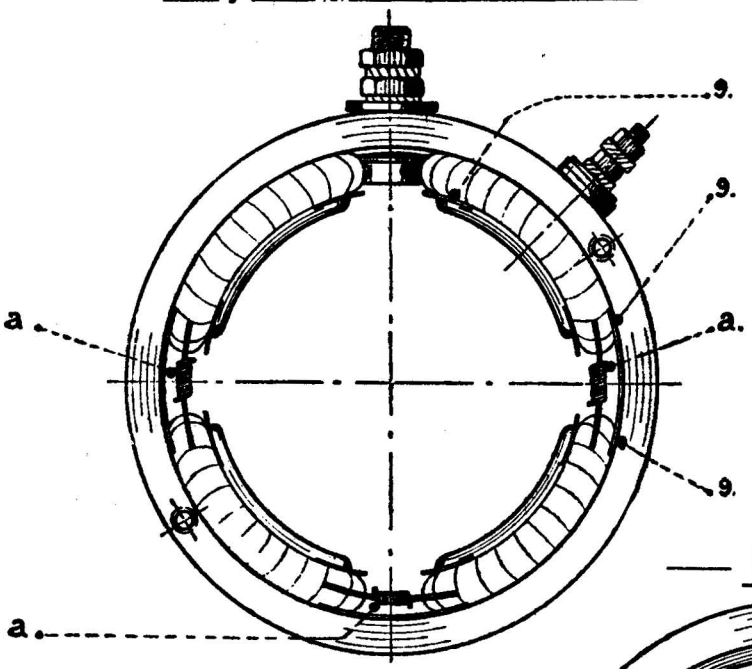

Fig. 2. INDUCTION COILS
View from brush end

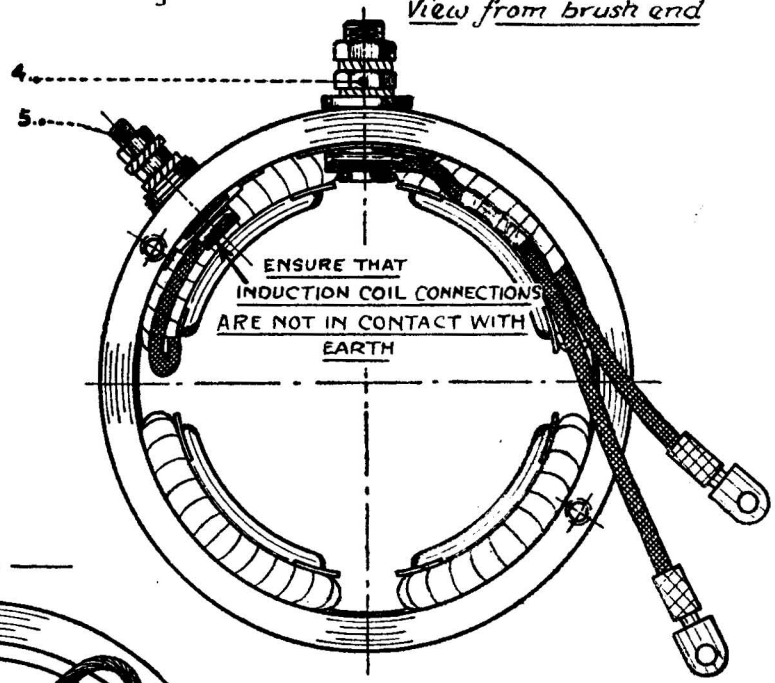

Fig. 3.

INDUCTION COILS *wiring at positive brush*

SHOWING HOW TO KEEP BRUSHES AWAY
FROM ARMATURE WHILE ASSEMBLING

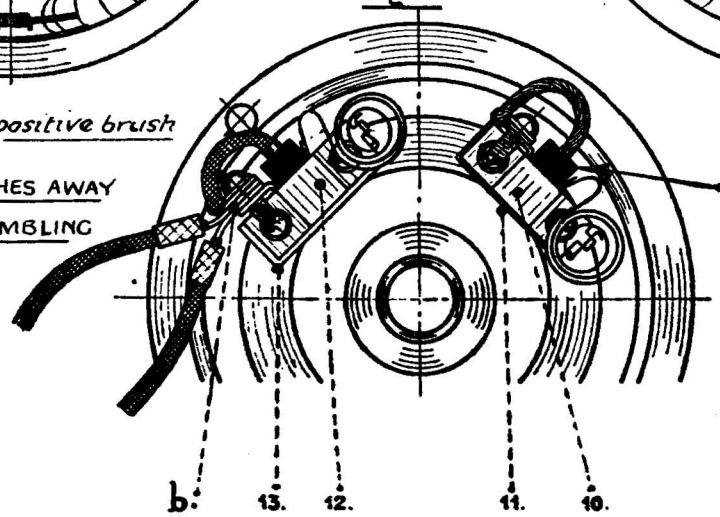

THE BRUSHES ARE HELD AWAY BY THE
SPRINGS IN ORDER TO ALLOW THE
ARMATURE TO BE FITTED

ASSEMBLY OF INDUCTION COILS AND POLE-PIECES DYNAMO AND STARTER MOTOR

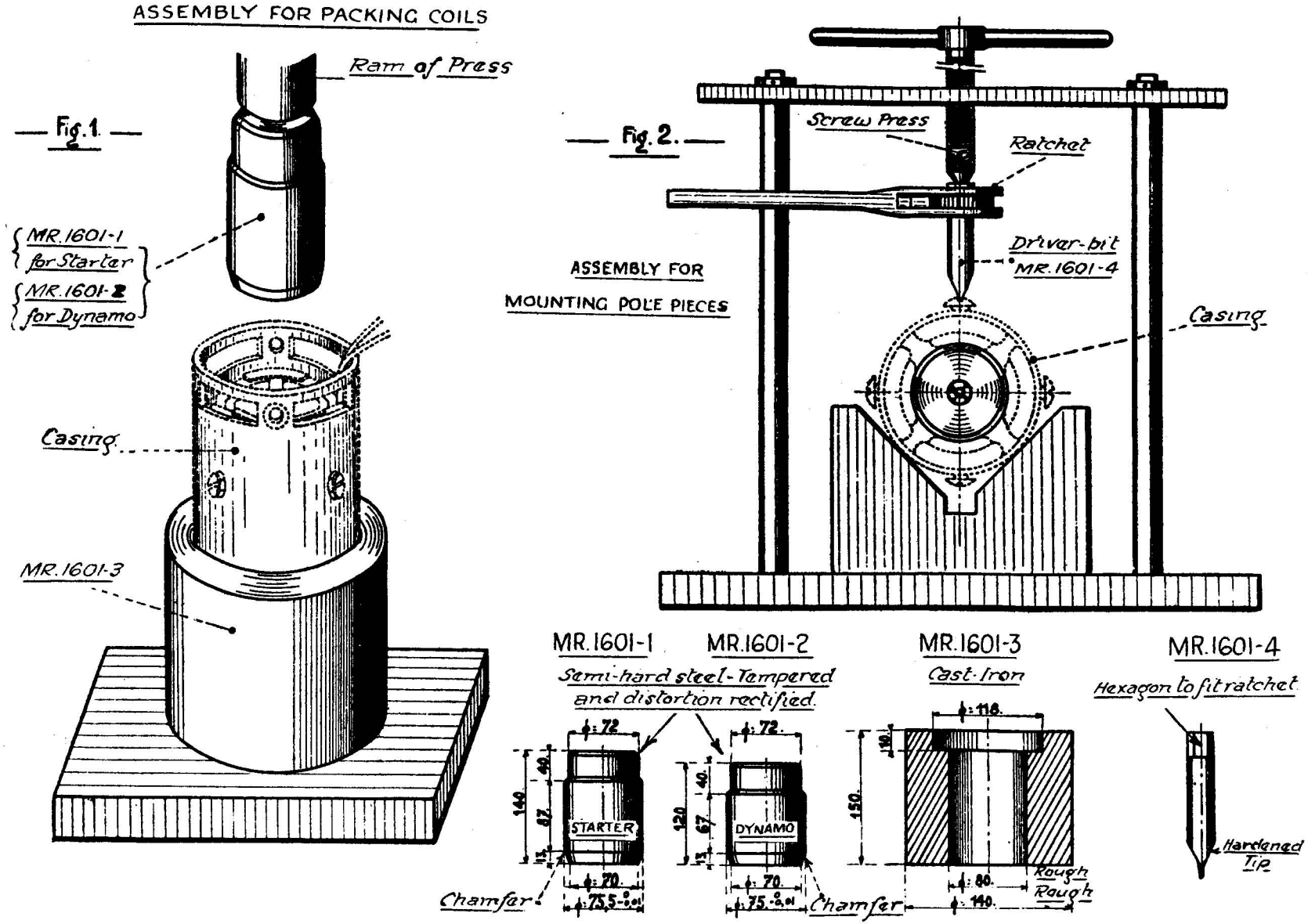

STARTER MOTOR ASSEMBLY

LONGITUDINAL SECTION ON CENTRE LINE.

Fig. 1

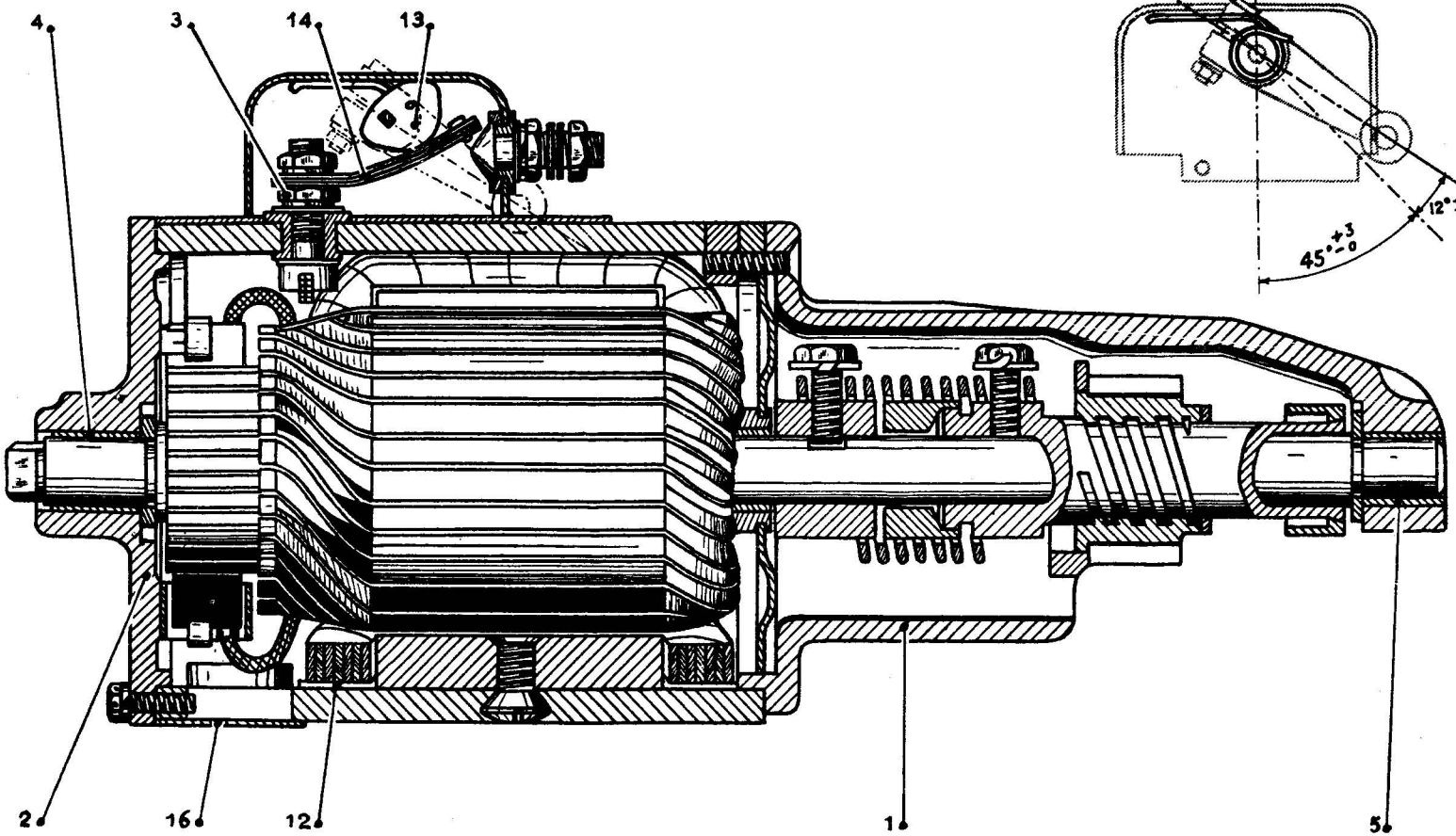

Fig. 2

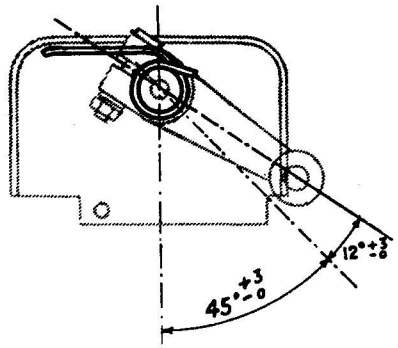

Return spring for starter pinion not shown.

STARTER MOTOR ASSEMBLY

END VIEWS

Fig. 1.

ASSEMBLY OF INDUCTION COILS

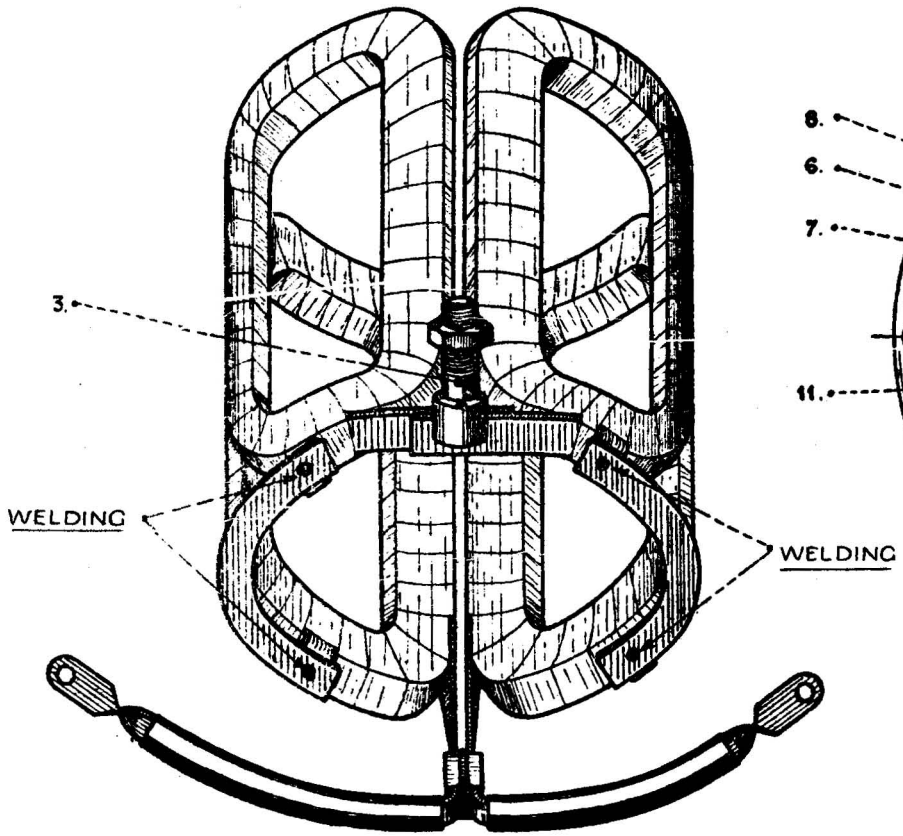

Fig. 2.

ASSEMBLY OF BRUSHES

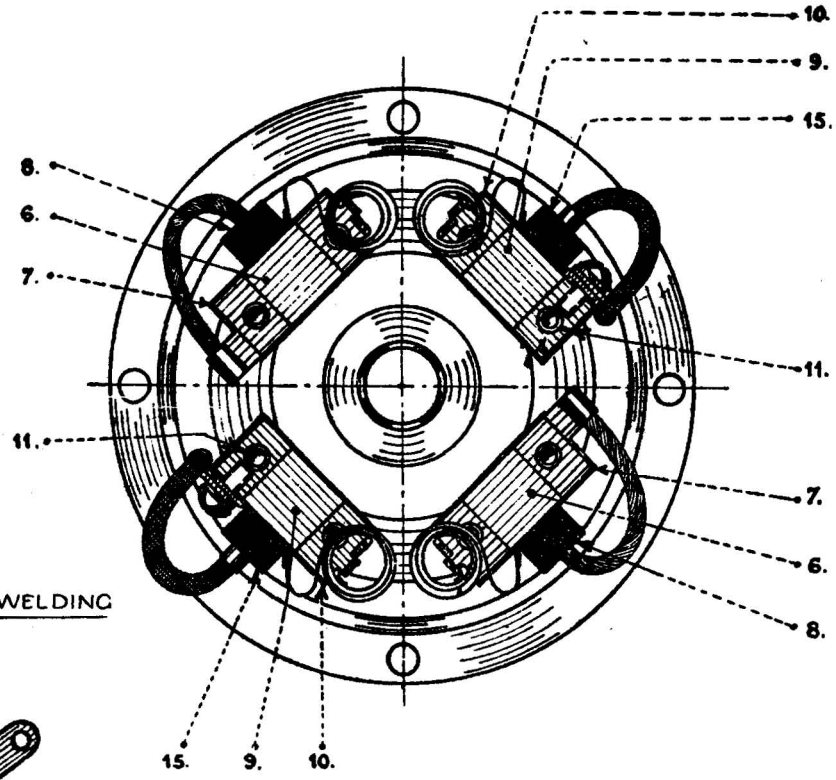

BRUSHES ARE HELD AWAY FROM ARMATURE INSIDE BRUSH CARRIERS BY SPRINGS, THUS ALLOWING PASSAGE OF ARMATURE

ADJUSTMENTS

CHECKING CASTER ANGLE

DETAILS OF LOWER INDICATOR

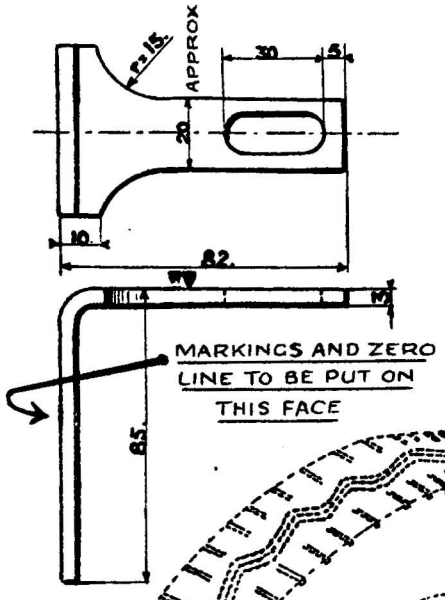

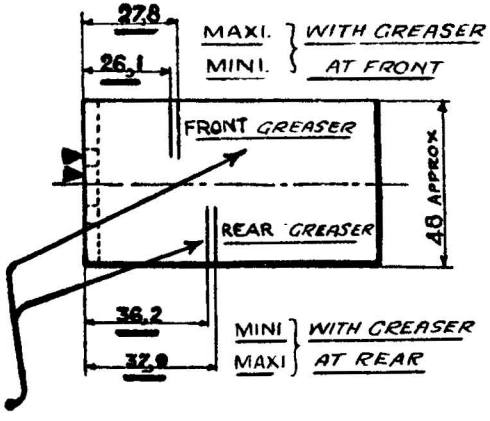

DETAILS OF PLUMB-BOB SUPPORT

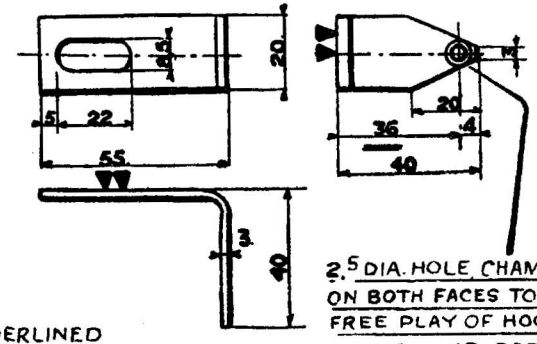

2.5 DIA. HOLE, CHAMFERED ON BOTH FACES TO ALLOW FREE PLAY OF HOOK OF PLUMB-BOB.

NOTE: IMPORTANT DIMENSIONS UNDERLINED SHOULD BE CAREFULLY ADHERED TO. FACES MARKED ▼▼ SHOULD BE GROUND.

ASSEMBLY SHOWING USE OF GAUGE

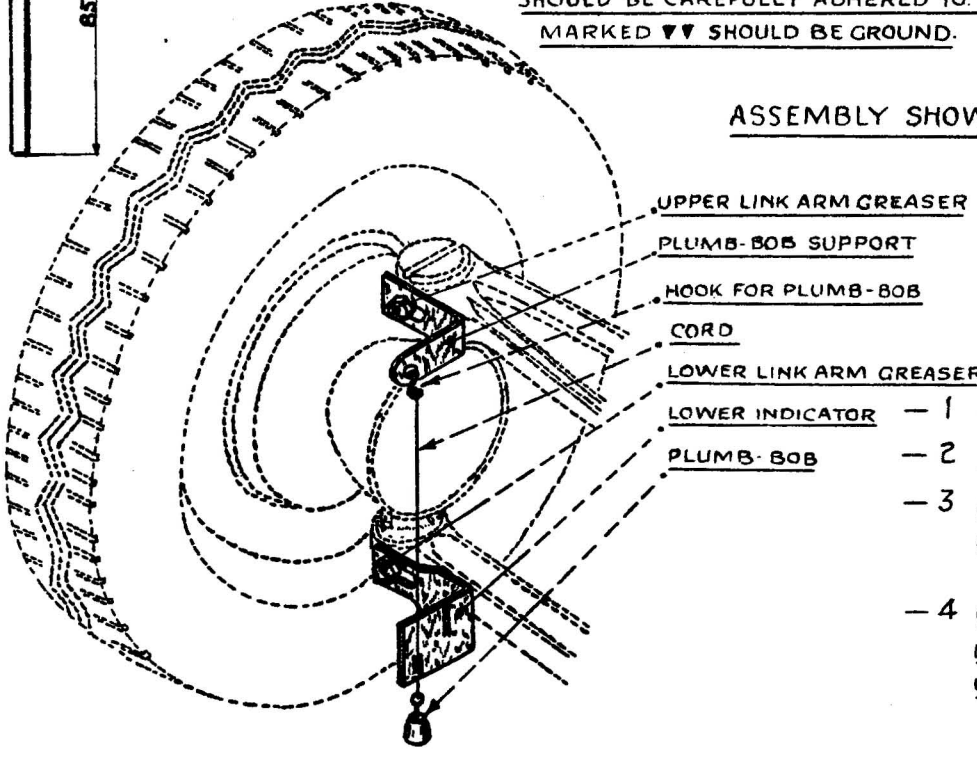

MR. 1767

MOUNTING GAUGE

— 1 REMOVE GREASERS ON UPPER AND LOWER LINK ARMS

— 2 MOUNT BRACKETS AS SHOWN

— 3 ADJUST LOWER INDICATOR SO THAT INNER FACE IS AS NEAR CONTACT OF CORD AS POSSIBLE WITHOUT TOUCHING.

— 4 ENSURE THAT PLUMB-BOB CORD FALLS BETWEEN MARKINGS CORRESPONDING TO GREASER TAPPING USED.

ADJUSTMENTS

CHECKING LENGTHS OF TRACK RODS

Fig. 1.

ASSEMBLY SHOWING USE OF GAUGE

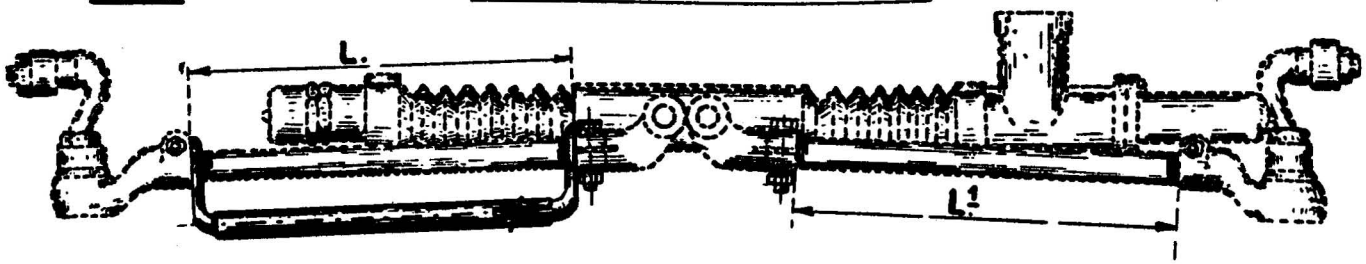

DETAILS OF GAUGE MR1590

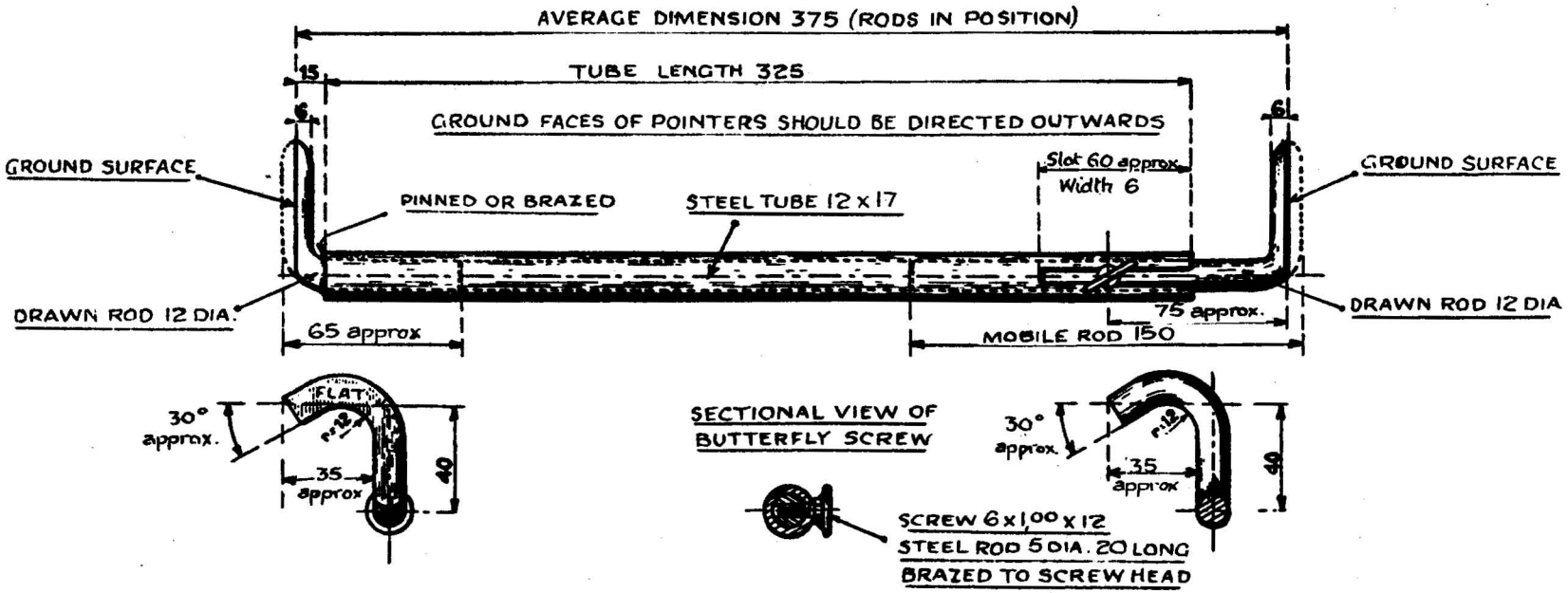

DISTANCE L BETWEEN SOCKET ENDS AT ONE SIDE SHOULD EQUAL DISTANCE L' BETWEEN SOCKET ENDS AT OTHER SIDE TOLERANCE 1mm (see fig. 1)

— CHECKING STEERING LOCK —

Fig. 1. USE OF GAUGE.

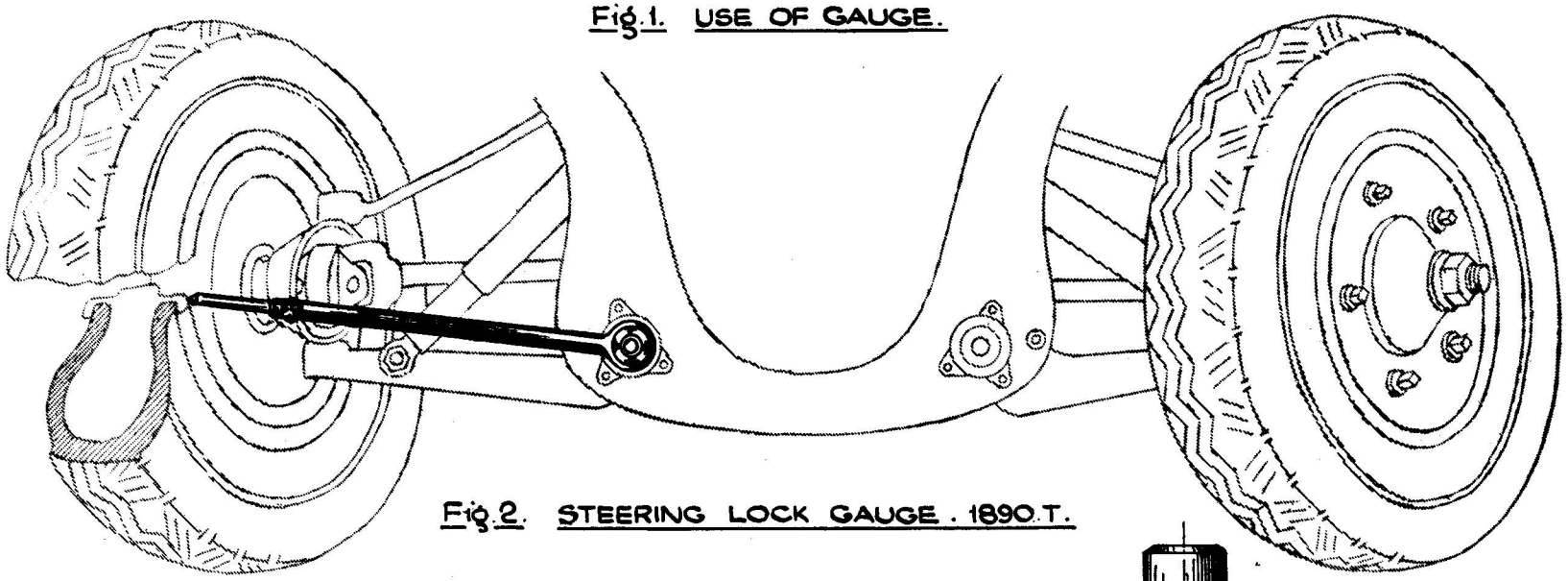

Fig. 2. STEERING LOCK GAUGE . 1890.T.

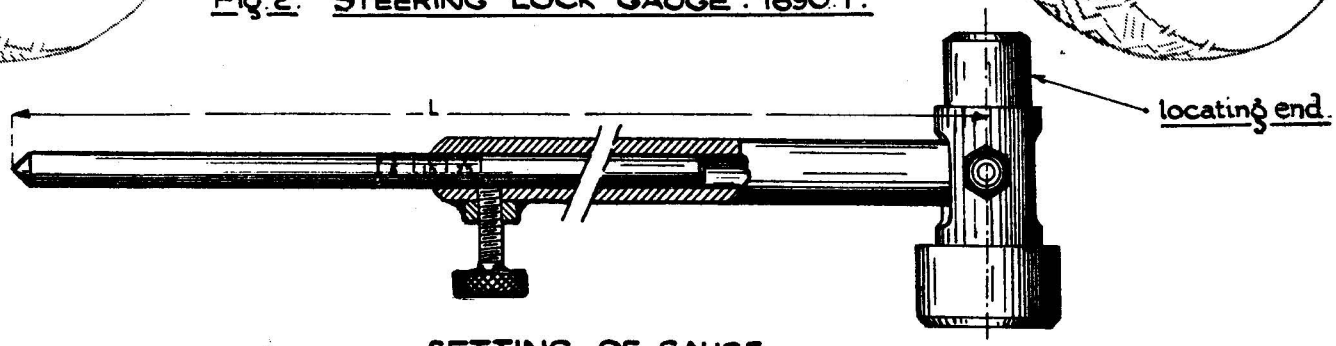

SETTING OF GAUGE.

	TYPE OF WHEEL	READING	LENGTH 'L'
7 & 11 FRONT WHEEL DRIVE	STOP 140×40	18	570
	STOP 150×40	12	564
	STOP 160×40	5	557
	PILOTE 155×400	23	575
	PILOTE 165×400	18	570
	PILOTE 185×400	11	563
	BM 165×400	23	575

CHECKING WHEEL CAMBER

Fig.1. USE OF GAUGE

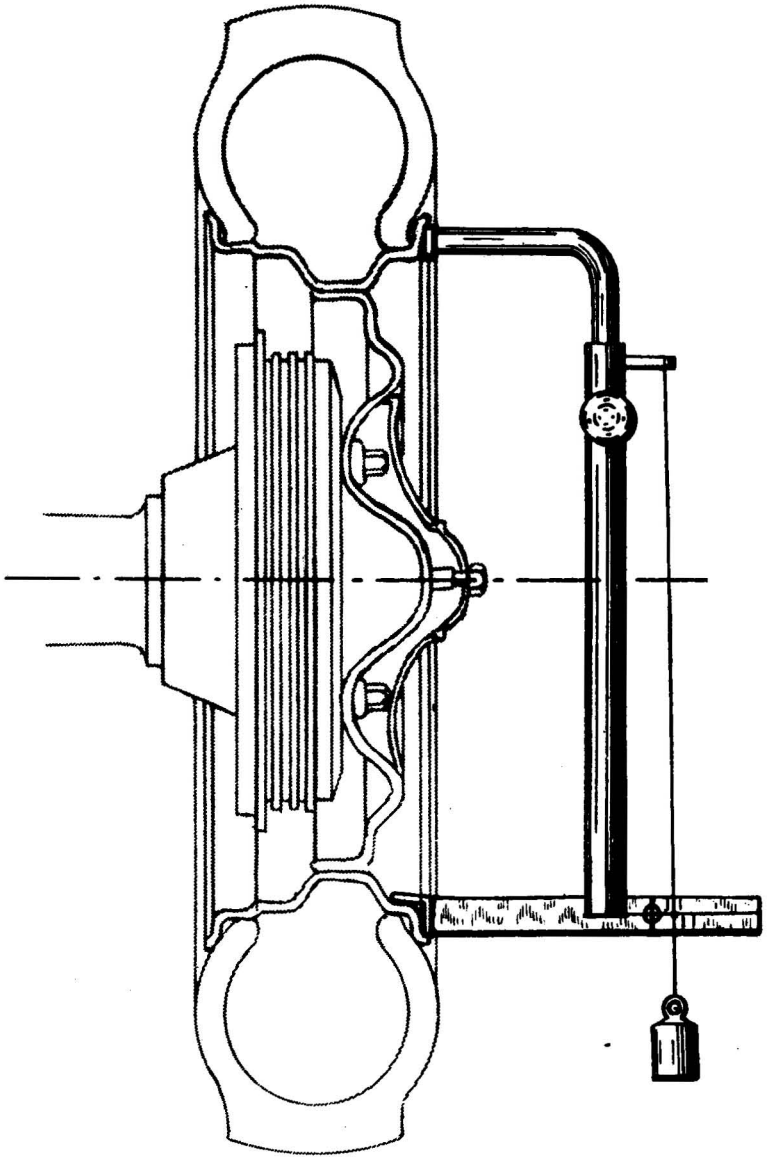

Fig.2. ENLARGED VIEW OF SCALE.

Plumb line must rest between two gauge lines.

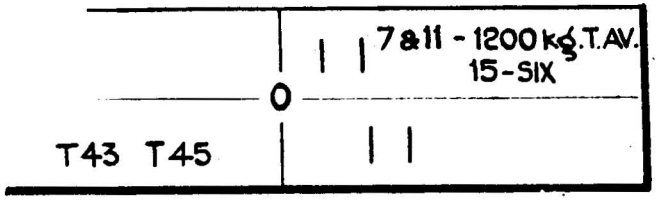

GAUGE 2314.T.

WEIGHT DISTRIBUTION

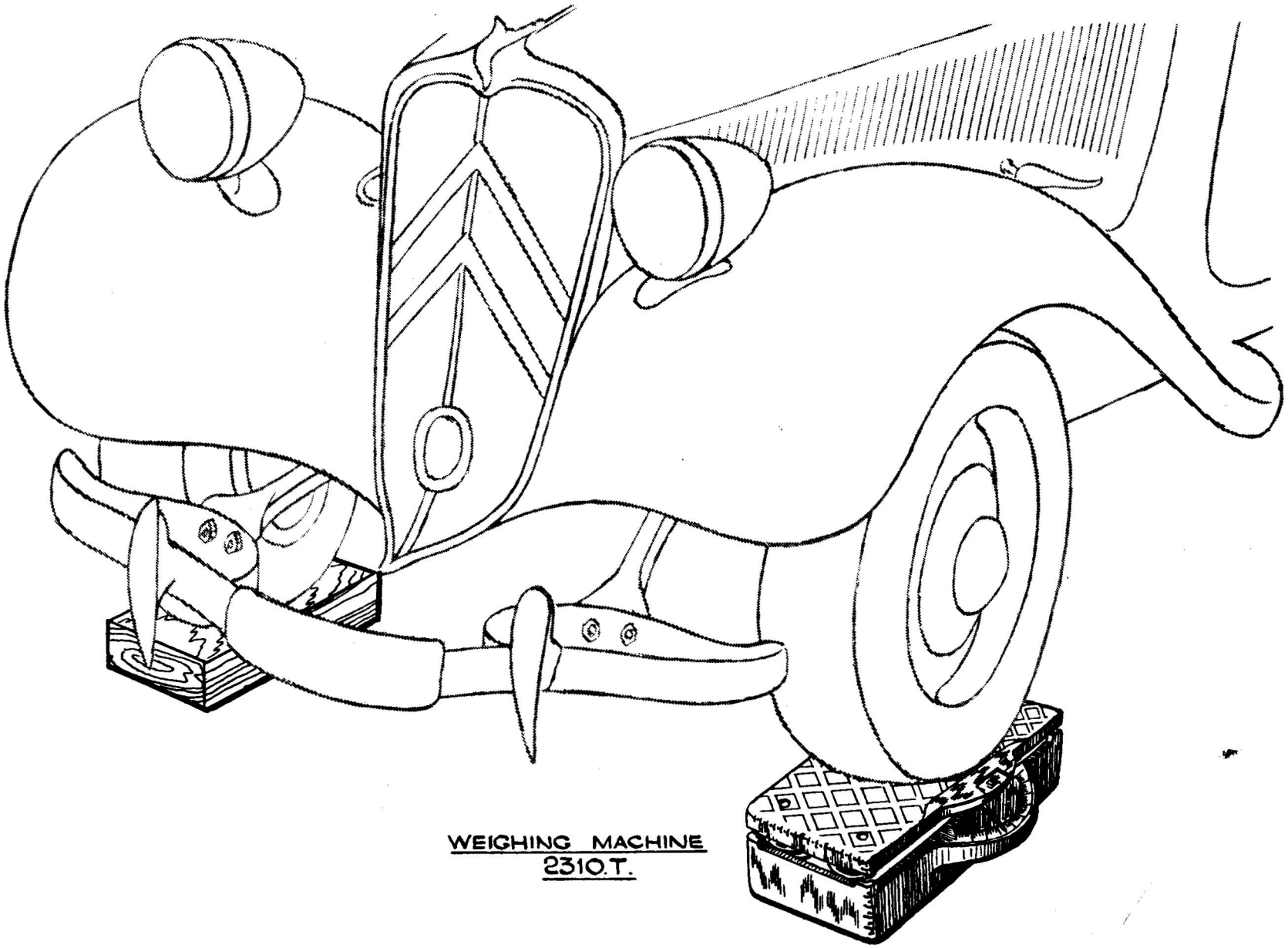

WEIGHING MACHINE
2310.T.

ADJUSTMENTS

CHECKING WHEELS

Fig. 1. LOCATING HEAVY PART

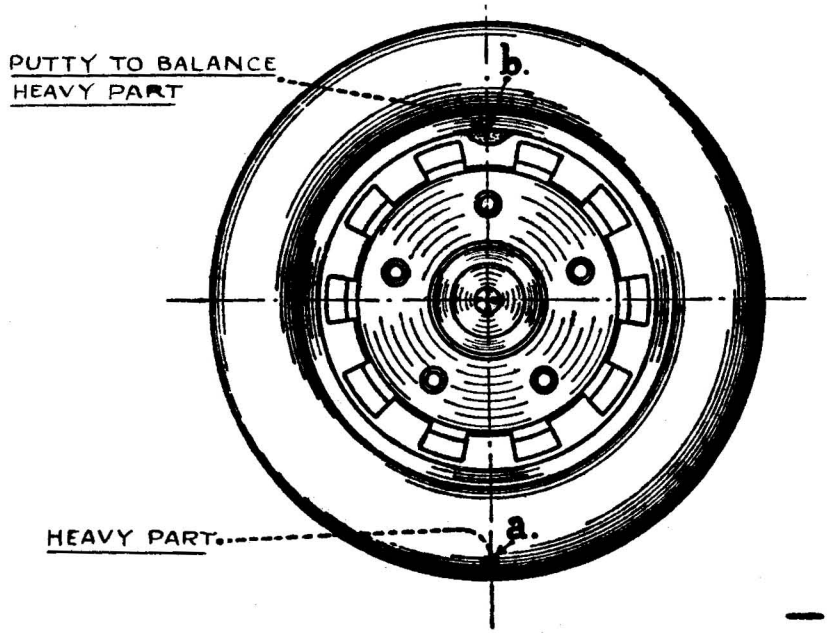

Fig. 2. ASSEMBLY SHOWING WHEEL MOUNTED FOR BALANCING

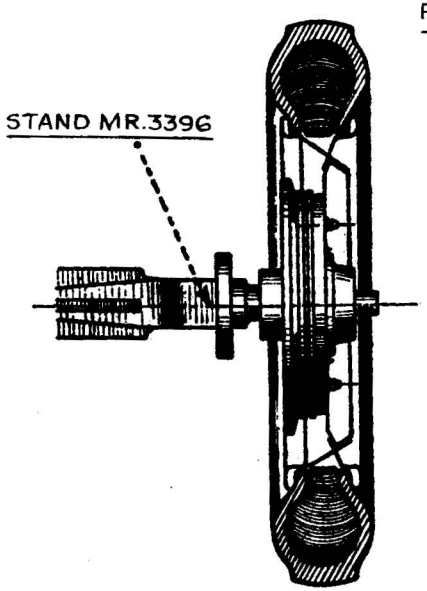

Fig. 3. POSITION OF WELDED BALANCE WEIGHT

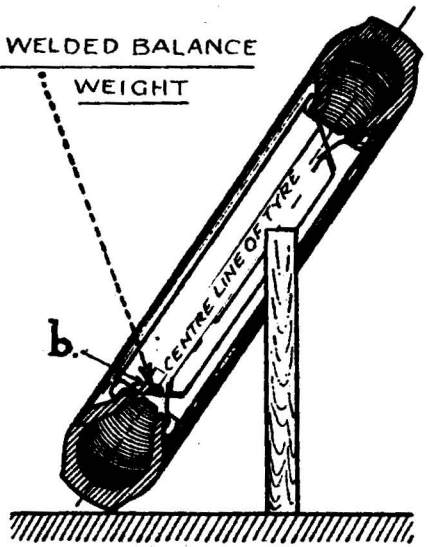

Fig. 4. CHECKING DISTORTION OF RIM

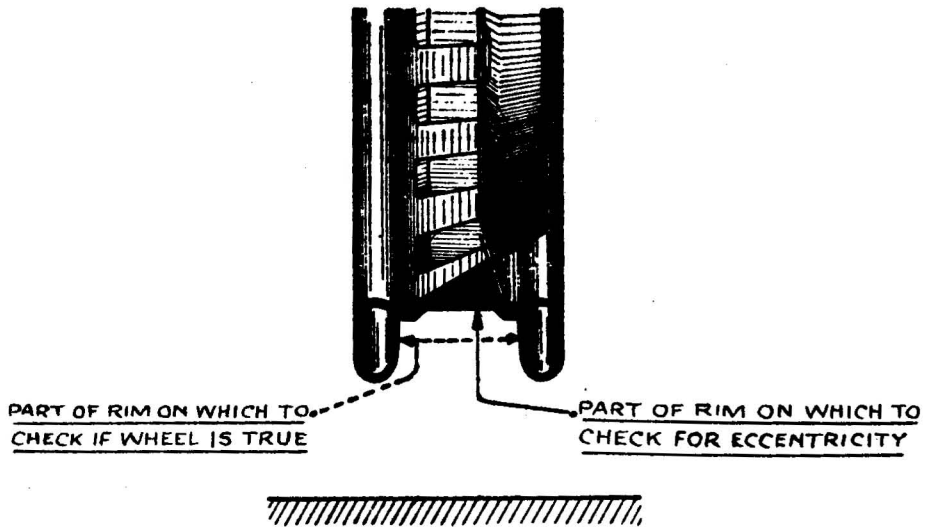

— CHECKING BALANCE OF WHEELS —

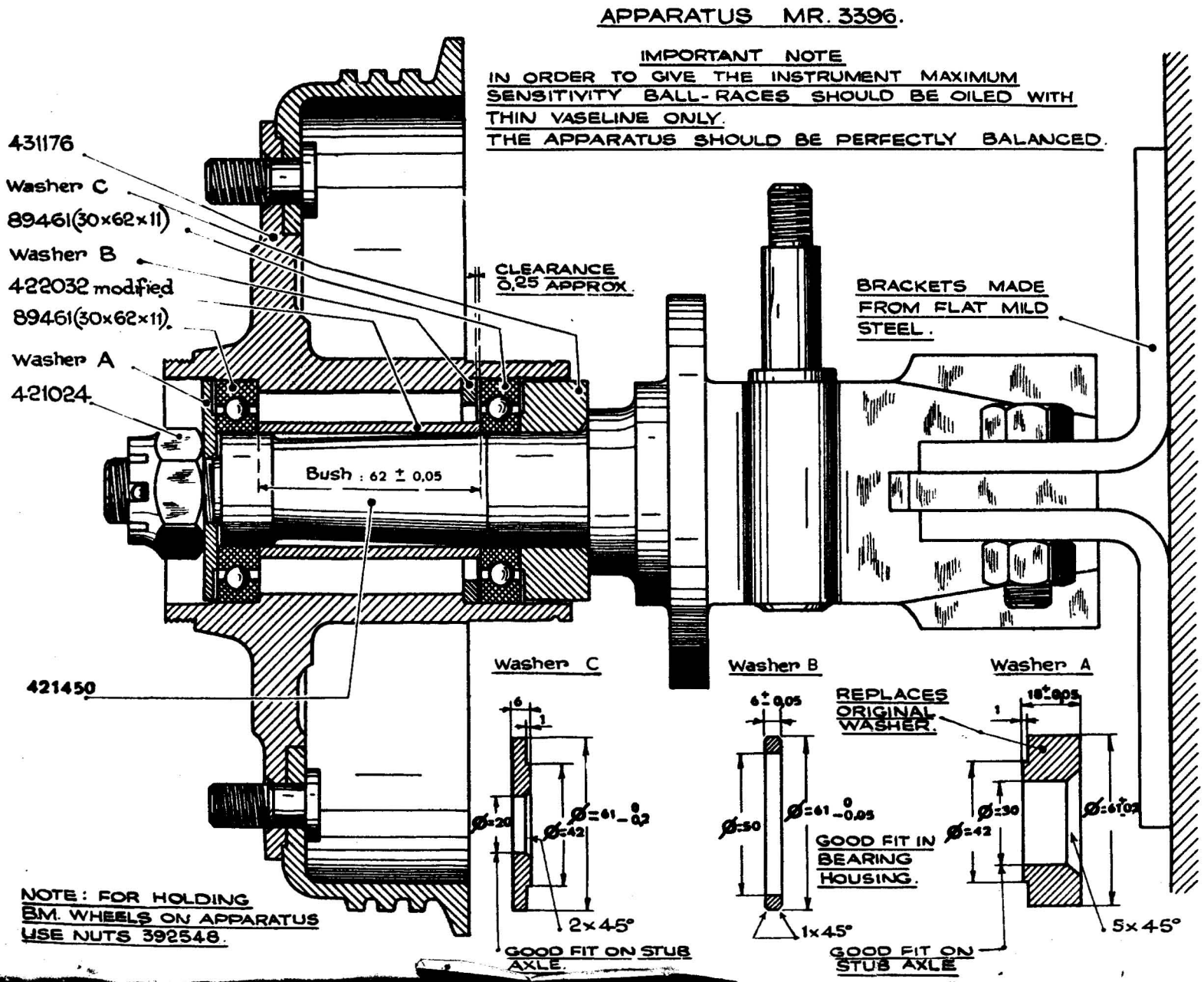

ADJUSTMENTS

ADJUSTING HEADLAMPS

Fig. 1. SCREEN MR. 1572.

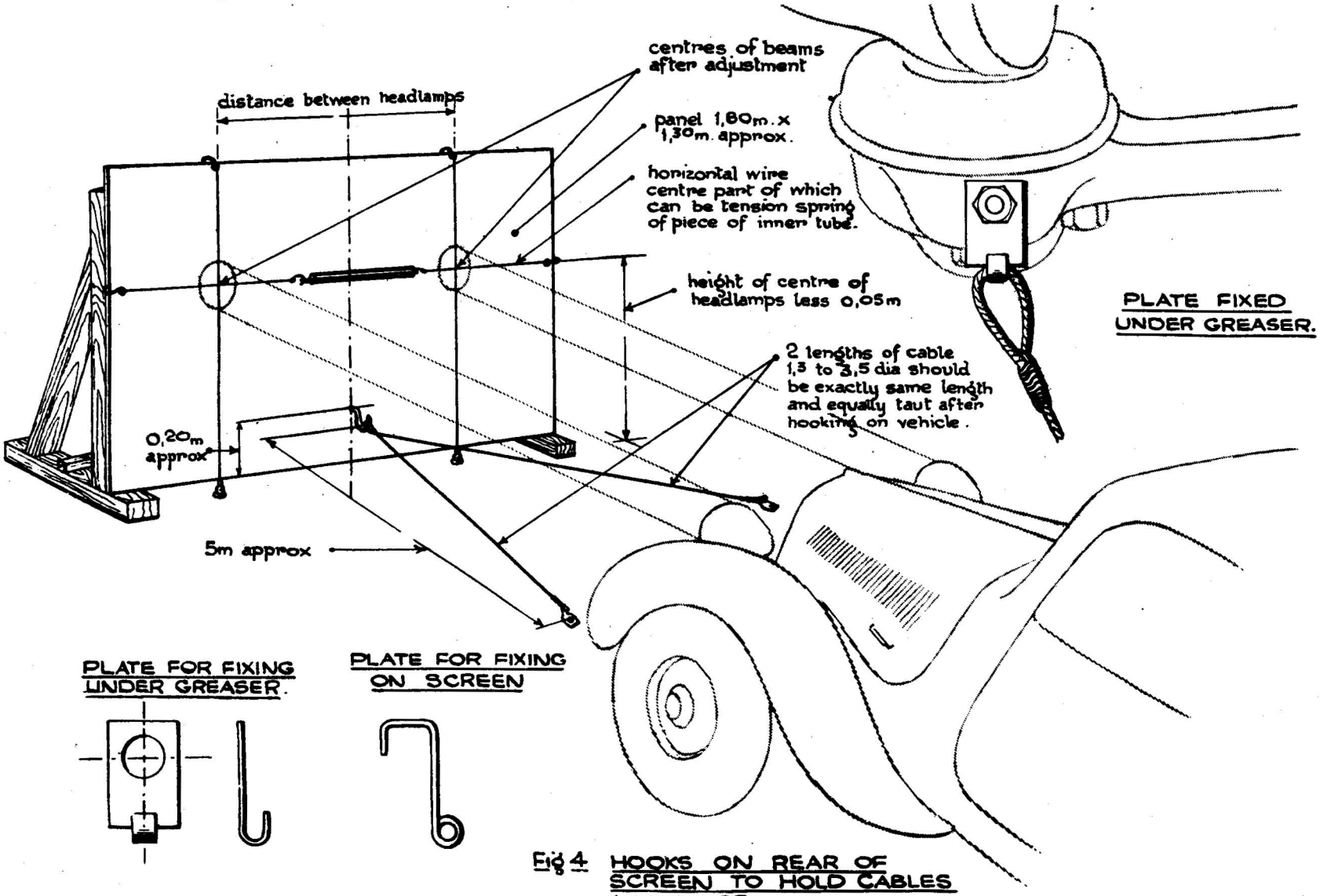

Fig. 2. FIXING CABLES ON LOWER LINK ARM BOSS.

Fig 4 HOOKS ON REAR OF SCREEN TO HOLD CABLES AFTER USE.